MicroManager

Torque Mode
CTCW/Loadcell
Control

Instruction Manual
MM3000-CTCW

Table of Contents

1. General Description 5
2. Specifications 5
    2.1 Electrical 5
    2.2 Physical 6
3. Installation 6
    3.1 Wiring Guidelines 6
4. Terminal Connections 7
    4.1 Signal Connections 7
5. User Interface 8
6. Quick Start Procedure 9
    6.1 Description of Diameter Calculation Methods 9
    6.2 Description of Signals 10
    6.3 Config 1: No Loadcell with External Diameter Comp (A) 12
    6.4 Config 2: No Loadcell with External Diameter Comp (B) 14
    6.5 Config 3: No Loadcell with Roll Revolutions Diameter Comp 16
    6.6 Config 4: No Loadcell with Line Revolutions Diameter Comp 18
    6.7 Config 5: No Loadcell with Line Speed/Roll Speed Diameter Comp (A) 20
    6.8 Config 6: No Loadcell with Line Speed/Roll Speed Diameter Comp (B) 22
    6.9 Config 7: No Loadcell with Line Speed/Roll Speed Diameter Comp (C) 24
    6.10 Config 8: Loadcell with External Diameter Comp 26
    6.11 Config 9: Loadcell with Roll Revolutions Diameter Comp 28
    6.12 Config 10: Loadcell with Line Revolutions Diameter Comp 30
    6.13 Config 11: Loadcell with Line Speed/Roll Speed Diameter Comp (A) 32
    6.14 Config 12: Loadcell with Line Speed/Roll Speed Diameter Comp (B) 34
    6.15 Torque Calibrations 36
    6.16 Taper Tension Adjustment 37
    6.17 Upper Speed Limit 37
    6.18 MicroManager Configuration Documentation 38
7. Programming & Adjustments 39
    7.1 Analog Inputs 39
    7.2 Digital Inputs 41
    7.3 Frequency Input 41
    7.4 HMI 43
    7.5 Communications 43
    7.6 Digital Outputs 45
    7.7 Analog Outputs 46
    7.8 PID Loop 47
    7.9 Roll Speed Calculator 50
    7.10 Diameter Calculator 51
    7.11 Tension Calculator 54
    7.12 CTCW Calculator 56
    7.13 Logic Gates 59
    7.14 Reference Select Blocks 62
    7.15 Internal Links 63
    7.16 System Parameters 63
    7.17 Auxiliary Parameters 65
    7.18 Processing Order 65

7.19 Parameter Table 67
8. Modbus® Overview 74
8.1 Modbus® Protocol 74
8.2 Modbus® Functions 76
8.3 CRC-16 Calculations 85
9. Prints 87
D13548 Sheet 1 Connection Diagram 87
D13548 Sheet 2 Connection Diagram 88
D13548 Sheet 3 Connection Diagram 89
D13539 Sheet 1 Software Block Diagram 90
D13539 Sheet 2 Software Block Diagram Config 1 91
D13539 Sheet 3 Software Block Diagram Config 2 92
D13539 Sheet 4 Software Block Diagram Config 3 93
D13539 Sheet 5 Software Block Diagram Config 4 94
D13539 Sheet 6 Software Block Diagram Config 5 95
D13539 Sheet 7 Software Block Diagram Config 6 96
D13539 Sheet 8 Software Block Diagram Config 7 97
D13539 Sheet 9 Software Block Diagram Config 8 98
D13539 Sheet 10 Software Block Diagram Config 9 99
D13539 Sheet 11 Software Block Diagram Config 10 100
D13539 Sheet 12 Software Block Diagram Config 11 101
D13539 Sheet 13 Software Block Diagram Config 12 102
D13307 Modbus® Network Connections 103
10. Standard Terms & Conditions of Sale 105

List of Tables

Table 1: Pre-defined Configurations 9
Table 2: Thickness Select 11
Table 3: Analog Input Status Readings 39
Table 4: Baud Rate Settings 43
Table 5: Parity Stop Bits Settings 44
Table 6: Analog Output Status Readings 47
Table 7: Thickness Selections 54
Table 8: Typical Inertia Sensitivity Values 57
Table 9: Line Speed Status Values 57
Table 10: Set Reset Truth Table 60
Table 11: Reference Selection 62
Table 12: Save Status Readings 64
Table 13: System Status Readings 64
Table 14: Processing Order Codes 66
Table 15: Parameters by Tag 67
Table 16: Supported Modbus® Functions 75

List of Figures

Figure 1: Physical Dimensions 6
Figure 2: General Connections 7
Figure 3: No Loadcell with External Diameter Comp (Configuration 1) 12
Figure 4: No Loadcell with External Dia Comp (Configuration 2) 14
Figure 5: No Loadcell with Roll Revs Diameter Comp (Configuration 3) 16
Figure 6: No Loadcell with Line Revolutions Diameter Comp (Configuration 4) 18
Figure 7: No Loadcell with Line Speed/Roll Speed Diameter Comp (Configuration 5) 20

Figure 8: No Loadcell with Line Speed/Roll Speed Diameter Comp (Configuration 6) 22
Figure 9: No Loadcell with Line Speed/Roll Speed Diameter Comp (Configuration 7) 24
Figure 10: Loadcell with External Diameter Comp (Configuration 8) 26
Figure 11: Loadcell with Roll Revolutions Diameter Comp (Configuration 9) 28
Figure 12: Loadcell with Line Revolutions Diameter Comp (Configuration 10) 30
Figure 13: Loadcell with Line Speed/Roll Speed Diameter (Configuration 11) 32
Figure 14: Loadcell with Line Speed/Roll Speed Diameter (Configuration 12) 34
Figure 15: Block Diagram Key 39
Figure 16: Analog Inputs 39
Figure 17: Digital Inputs 41
Figure 18: Frequency Input 41
Figure 19: HMI 43
Figure 20: Communications 43
Figure 21: Digital Outputs 45
Figure 22: Analog Outputs 46
Figure 23: PID Loop Blocks 47
Figure 24: Winder Speed Vs Diameter 50
Figure 25: Roll Speed Calculator 51
Figure 26: Diameter Calculator 51
Figure 27: Tension Calculator 54
Figure 28: Taper Tension Example 55
Figure 29: Logic Gate Blocks 56
Figure 30: Logic Gate Blocks 59
Figure 31: Logic Gate Timer Functions 61
Figure 32: Reference Selects Blocks 62
Figure 33: Internal Links 63
Figure 34: System Parameters 63
Figure 35: Auxiliary Parameters 65
Figure 36: Processing Order Block 65

1 General Description

The MicroManager 3000 series is a microprocessor based industrial system controller designed to handle a wide range of industrial applications. The simple user interface allows high level microprocessor control of an application but without the need of a computer for configuration.

Model MM3000-CTCW (Constant Tension Center Winder) is designed for use with a torque mode drive to provide constant tension or taper tension control of a center driven winder. Web tension is regulated by controlling motor torque through varying levels of material roll diameter, line speed, and line acceleration. These diameter, friction, and inertia compensating torque signals can also be used with an optional loadcell feedback signal to provide closed loop tension control.

2 Specifications

2.1 Electrical

A.C. Input Voltage Range - Single Phase
- 115 VAC ± 10%, 50/60 Hz ± 2 Hz
- Fused internally

Power Supply Output
- +12V regulated supply: 70mA max.

Digital Inputs (4 Total)
- Sinking or Sourcing Logic (selectable)
- Vil=+10.5 VDC min to +12.0 VDC max
- Vih=0.0 VDC min to +8.5 VDC max

Analog Inputs (2 Total)
- 10 bit resolution (over-sampled to achieve 12 bit)
- Voltage Range: 0 to +12 VDC
- Input Impedance: 240kΩ

Frequency Inputs (1 Total)
- Sinking or Sourcing Logic (selectable)
- Frequency: 42kHz max, square wave
- Voltage: +12 VDC max
  Vil=0.0 VDC min to +1.5 VDC max
  Vih=+2.5 VDC min to +12.0 VDC max

Digital Outputs (2 Total)
- Open collector (sinking output)
- 100ma max, 30VDC max

Analog Outputs (3 Total)
- Outputs 1 & 2:
  12 bits, voltage 0 to +10 VDC max,
  or current 0 to +20 mADC max
- Output 3:
  10 bits, voltage only 0 to +5 VDC max

Communications
- Modbus® RTU
- RS485 Multidrop (2 or 4 wire)

Temperature Range
- Chassis: 0-55°C

2.2 Physical

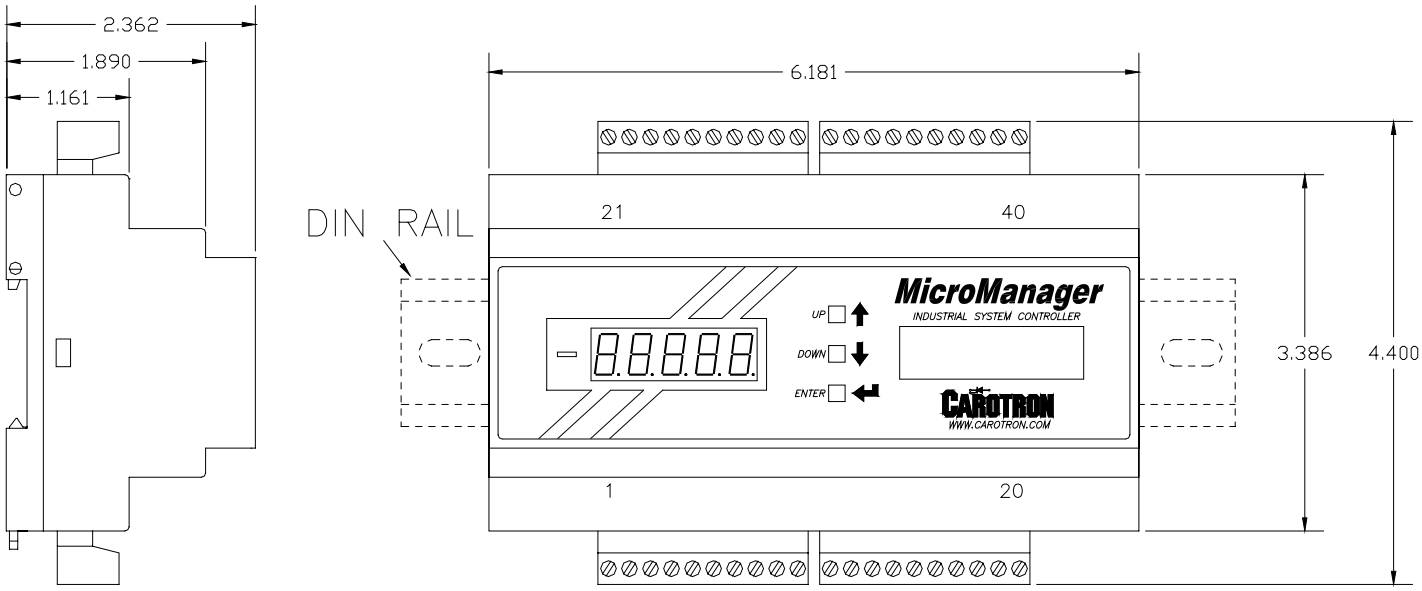

Figure 1: Physical Dimensions

3 Installation

3.1 Wiring Guidelines

To prevent electrical interference and to minimize start-up problems, adhere to the following guidelines:

Make no connections to ground other than at the designated terminal strip location.

Use fully insulated and shielded cable for all signal wiring. The shield should be connected to circuit common at one end only. The other end of the shield should be clipped and insulated to prevent the possibility of accidental grounding.

Signal level wiring such as listed above should be routed separately from high level wiring such as armature, field, operator control and relay control wiring. When these two types of wire must cross, they should cross at right angles to each other.

Any relay, contactor, starter, solenoid or other electro-mechanical device located in close proximity to or on the same line supply as the MicroManager should have a transient suppression device such as an MOV or R-C snubber connected in parallel with its coil. The suppressor should have short leads and be connected as close to the coil as possible.

4 Terminal Connections

4.1 Signal Connections

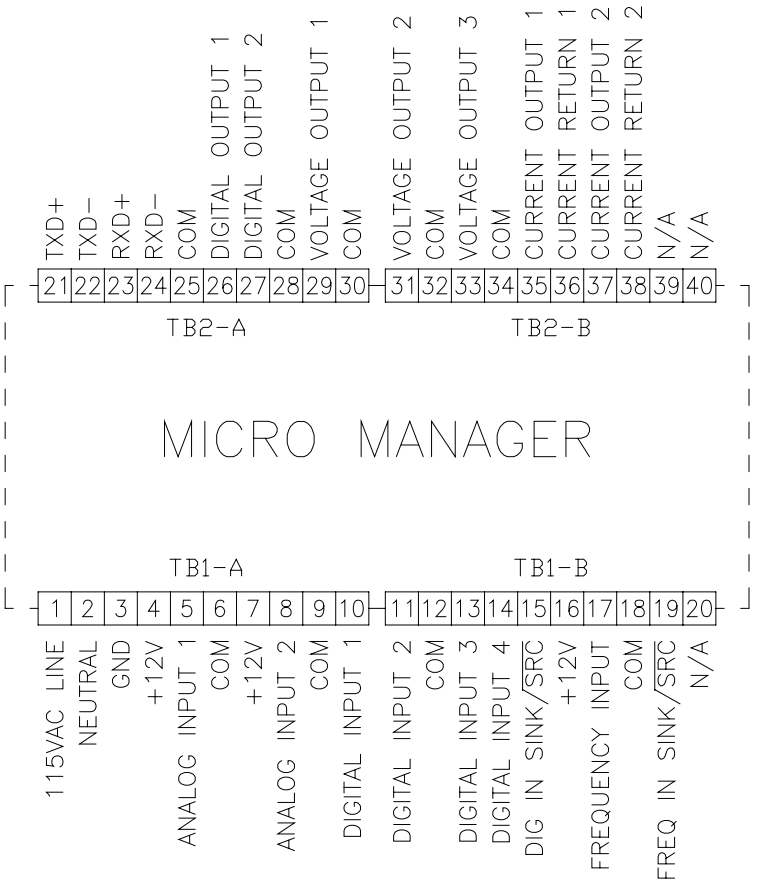

Figure 2: General Connections

5 User Interface

Programming and adjustment of the MicroManager is accomplished via a three button interface and 5 seven segment LED displays. When power is first applied, all of the LED segments (including the negative sign) are momentarily lit. The display is then cleared and **CArotron** scrolls across the display. Next, the firmware revision is displayed as **r x.xx**. Lastly, **P1** is displayed indicating parameter 1.

Editing parameters is performed by using the Up and Down buttons to select the desired parameter. When the Enter button is pressed, the value of the selected parameter will be displayed. If the parameter type is Read/Write, the Up and Down buttons can be used to edit the value. If either the Up or Down button is pressed and held, the rate that the parameter value changes will continually increase, allowing large changes to be made quickly. Once the desired value has been displayed, press the Enter button to enter the new value. To escape the editing mode without applying changes, press both the Up and Down buttons simultaneously.

The value of Read Only parameters can be viewed as above, but the Up and Down buttons cannot be used to edit the value. If either button is pressed while a Read Only parameter is displayed, the display will flash **rEAd Only** to remind the user that this parameter cannot be edited.

There are some parameters whose values cannot be changed while the unit is in the Run mode. These parameters are listed as ICR, **I**nhibit **C**hange while **R**unning. Similar to above, if these parameter values are attempted to be edited while running, the display will flash **icr Loc'd** (icr locked) to inform the user that this parameter is an ICR type and that it cannot be edited, since the unit is currently in the Run mode.

In a typical setup, there will be a few Read/Write parameters whose values will be controlled by inputs, or by other parameters. The connections between these inputs or parameters is called a link. Thus, when a parameter value is being set or controlled by an input link or an internal link, the parameter cannot be edited manually. Similar to above, if an attempt is made to edit one of these parameters, the display will flash **Linc Loc'd Pxxx** (where xxx will be a number indicating the source of the link) to inform the user that a link has been made to this parameter.

Whenever parameter changes are made, they must be saved by setting P1 to 1. Otherwise, changes will be lost when power is cycled on the unit.

On power up, if an internal memory errors while loading the parameter values, the LED's will continually flash **EE Error**. Press and hold either the Up or Down button until the unit resets. If the EE Error persists, the internal memory has likely been corrupted. Press both the Up and Down buttons to force the unit to re-initialize using the factory defaults. This can be verified as the display will momentarily display **dFLTS USEd** (defaults used). At this time, any parameter value changes must be re-entered.

6 Quick Start Procedure

The MM3000-CTCW has 12 predefined quick start configurations that can be loaded by setting P3 to the value listed in the table below. There are seven open loop configurations (no loadcell) and five closed loop loadcell configurations. Determine the configuration that best matches your application. Then proceed to the adjustment procedure (located later in this section) for the configuration that you have chosen.

Diameter Method	No Loadcell	Loadcell
External	1-2	8
Roll Revs	3	9
Line Revs	4	10
Line & Roll Speeds	5-7	11-12

Table 1: Pre-defined Configurations

Determine the method of roll diameter calculation that will be used. The MicroManager provides four methods for obtaining the roll diameter. Each method is described in detail below.

6.1 Description of Diameter Calculation Methods

External Diameter
The simplest example of an external diameter signal is a rider arm and a potentiometer. In this method, one end of a rider arm lies on the roll. A pivot point at the other end is attached to a potentiometer. As the diameter changes, a proportional voltage signal is produced. Other examples are sonic and laser sensors that output a voltage signal proportional to diameter.

Count Roll Revolutions
The diameter can be calculated by counting the roll revolutions. For every one revolution of the roll, two material thicknesses are added (for winders) or subtracted (for unwinders) to the diameter. Roll revolutions may be obtained from an encoder mounted on the roll drive or simply from a proximity sensor and a bolt on the roll shaft.

Line Revolutions
The diameter can also be calculated by counting the revolutions of a line roller in contact with the material. This basically measures the length of material wound onto or taken off of the roll. With this length, along with the material thickness, the diameter can be calculated. An encoder or proximity switch is typically used in conjunction with a roller wheel placed on the material to obtain the revolutions.

Line Speed & Roll Speed
The roll diameter can be calculated by dividing the line speed by the roll speed.

6.2 Description of Signals

Below is a brief description of the signal functions that are used on many of the pre-defined MicroManager configurations. Note that **not** all functions are used/available on every configuration.

Diameter
In configurations 1, 2 & 8, an external sensor provides the MicroManager with a signal that is proportional to the actual winder/unwinder diameter. The external sensor is typically configured to provide 0 Volts at core and 10V at max diameter. This sensor can be as simple as a rider arm attached to a potentiometer or as complex as a sonic or laser that measures distance.

Diameter Hold
In configurations where the diameter is calculated via the Line Speed and Roll Speed signals, the Diameter Hold digital input can be used to pause or hold the diameter calculation at its present level. This is sometimes necessary in these configurations especially when the line is starting and stopping.

Diameter Reset
In configurations where the diameter is calculated by counting pulses, this digital input is used to reset the count, returning the diameter to core for winders and max for unwinders.

Drive Enable
This digital output is on (sinking) when the Run input is active and off when the Run input is off. This output is typically used to start/stop the torque mode drive.

Line Speed
This signal is proportional to the speed of the line. Depending upon the configuration selected, this signal can be provided as an analog or a frequency.

Run
This is a digital input that enables the MicroManager torque reference output. Often, this signal is provided by a 'Run' contact on the line drive. This contact should be closed anytime the line drive is running (including ramping down to stop).

Stall
This is a digital input that enables the Stall mode. In this mode, a fixed torque level is output to the torque mode drive. This mode is typically used to prevent the roll from turning during standstill operation. This mode can be overridden by the Run mode.

Tension Setpoint
This signal provides the MicroManager with desired tension level of the material.

Thickness Select
In configurations where a material thickness is required to calculate diameter, these two digital inputs are used to select between 4 programmable thicknesses. Refer to the table below.

Digital Input 3	Digital Input 4	Thickness Used
Open	Open	P239: Thickness 0
Open	Closed	P240: Thickness 1
Closed	Open	P241: Thickness 2
Closed	Closed	P242: Thickness 3

Table 2: Thickness Select

Speed Reference

This is an optional output signal that can be used with some torque mode drives that also support a speed reference. Typically the drive would use this speed reference signal as an upper speed limit. Thus, if a material break occurs, the drive will not run away. This signal is available on all configurations, except the line speed and roll speed diameter setups.

6.3 Config 1: No Loadcell with External Diameter Comp (A)

This configuration uses an external sensor to provide the diameter. This setup is similar to Configuration 2 except here, Line Speed is provided as a frequency signal.

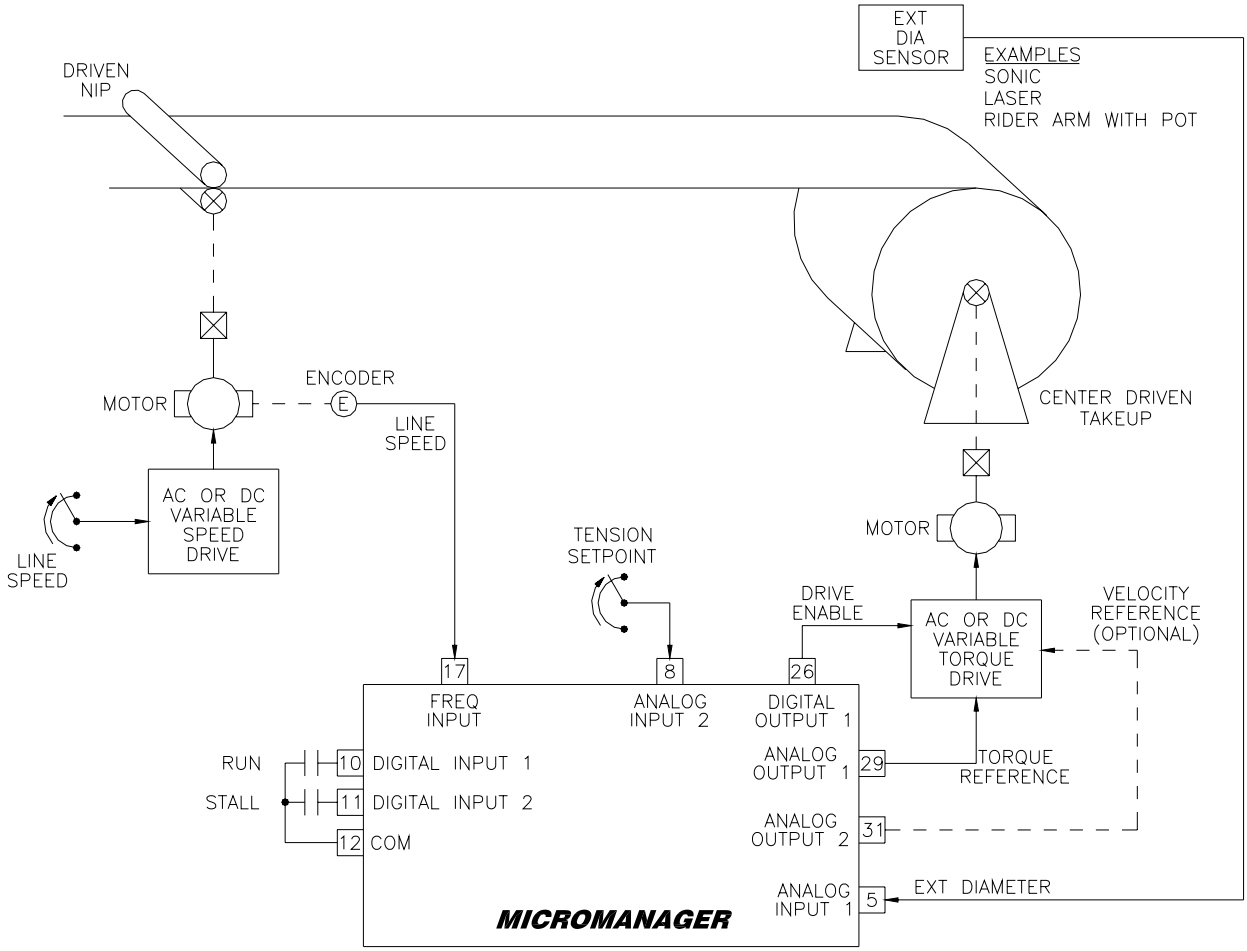

Figure 3: No Loadcell with External Diameter Comp (Configuration 1)

Step 1 Wiring & Initialization

1. Make wiring connections using D13548 on page 88. Initially, all material must be **removed** from the machine for setup. The smallest empty core that will be used should be loaded onto the winder. Place winder drive in the torque mode.
2. Apply power and set P3 (Initialize) to 1.
3. Set the following parameters according to your application. If multiple size core and max diameters are to be used, enter the smallest core diameter and the largest max diameter.
   P228 Core Diameter in user units
   P229 Max Diameter in user units

Step 2 Tension Setpoint Calibration

1. Set P24 to 1 to initiate the Analog Input 2 calibration. The display will momentarily show LoCAL, and then display the raw analog-to-digital conversion value. Adjust the

potentiometer fully counter clockwise to provide for the minimum input signal and then press ENTER. The display will momentarily show HiCAL, and again display the raw analog-to-digital conversion value. Adjust the potentiometer fully clockwise to provide for the maximum input signal and press ENTER. If an error occurred (i.e., min value > max value), CAL Error will be displayed and the calibration must be repeated.
2. The input can be verified by monitoring the value of P246 (Tension Setpoint). It should range from 0.00% to 100.00% as the potentiometer moves from min to max.

Step 3 External Diameter Calibration

1. The diameter sensor should be configured to provide a minimum signal at core and a maximum signal at full roll.
2. Set P23 to 1 to initiate Analog Input 1 calibration. The display will momentarily show LoCAL, and then display the raw analog-to-digital conversion value. With an empty core loaded, press ENTER. The display will momentarily show HiCAL, and again display the raw analog-to-digital conversion value. Load a full roll and then press ENTER. If an error occurred (i.e., min value > max value), CAL Error will be displayed and the calibration must be repeated.
3. The input can be verified by monitoring the value of P232 (Ext Dia Ratio). It should range from 0.00% at Core to 100.00% at Max Diameter. Also, P245 (Diameter) should display the actual diameter in user units.

Step 4 Line Speed Calibration

1. Set P68 to 1 to initiate Frequency Input calibration. The display will momentarily show LoCAL, and then display the actual frequency level in Hertz. With the line stopped, press ENTER. The display will momentarily show HiCAL, and again display the actual frequency value. Run the line speed to its maximum desired speed and press ENTER. If an error occurred (i.e., min value > max value), CAL Error will be displayed and the calibration must be repeated.
2. The input can be verified by monitoring the value of P222 (Line Speed). It should read 0.00% when the line is stopped and 100.00% at full speed.
3. While running at full speed, use a hand tachometer to measure the surface speed of a line roller to obtain the material speed (i.e. Ft/min, m/sec, etc…). This value will be needed later. Once complete stop the line.

Proceed to Step 5 in Section 6.15 Torque Calibrations on page 36.

6.4 Config 2: No Loadcell with External Diameter Comp (B)

This configuration uses an external sensor to provide the diameter. This setup is similar to Configuration 1 except here, Line Speed is provided as an analog signal.

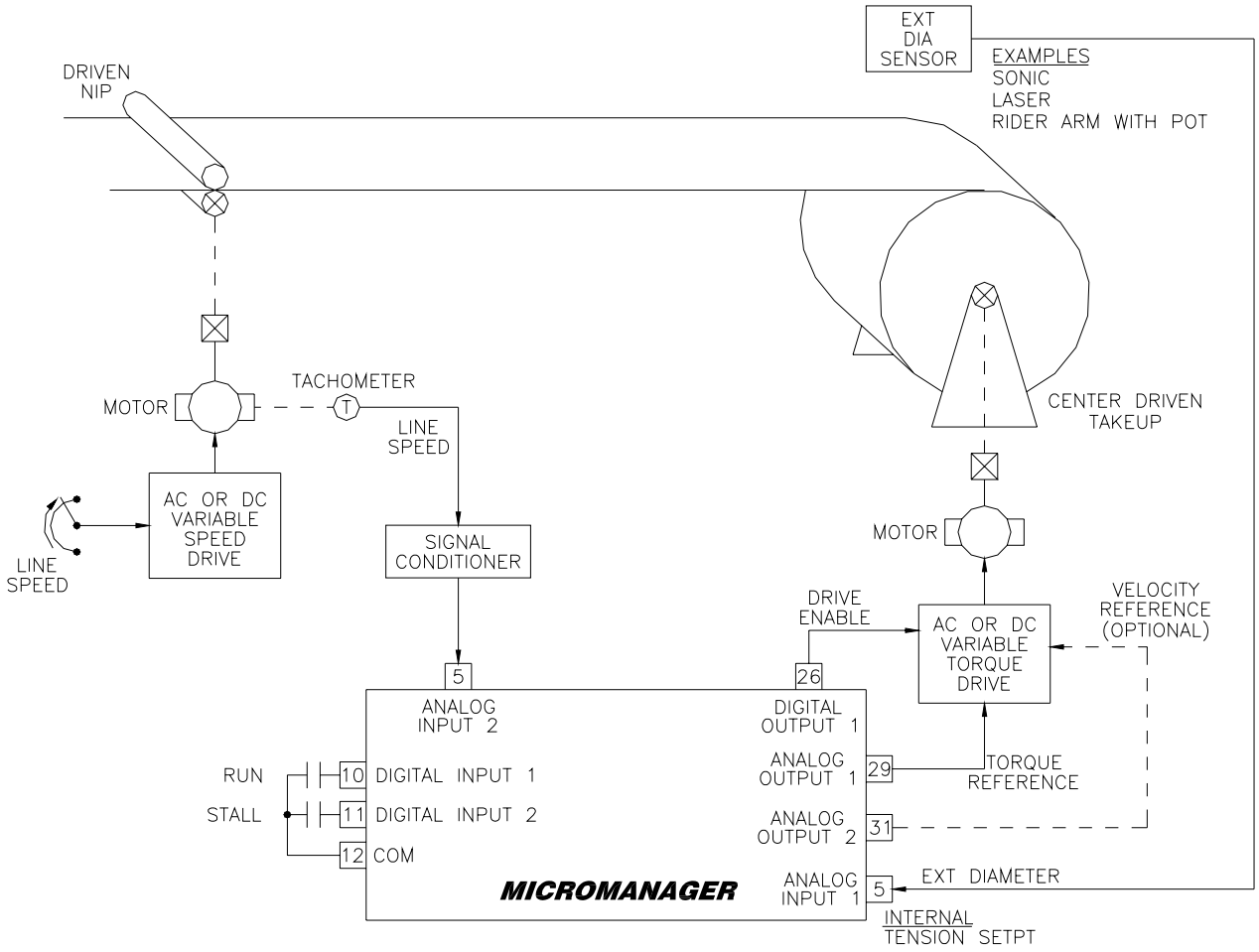

Figure 4: No Loadcell with External Dia Comp (Configuration 2)

Step 1 Wiring & Initialization

1. Make wiring connections using D13548 on page 88. Initially, all material must be **removed** from the machine for setup. The smallest empty core that will be used should be loaded onto the winder. Place winder drive in the torque mode.
2. Apply power and set P3 (Initialize) to 2.
3. Set the following parameters according to your application. If multiple size core and max diameters are to be used, enter the smallest core diameter and the largest max diameter.
   P228 Core Diameter in user units
   P229 Max Diameter in user units

Step 2 External Diameter Calibration

1. The diameter sensor should be configured to provide a minimum signal at core and a maximum signal at full roll.
2. Set P23 to 1 to initiate Analog Input 1 calibration. The display will momentarily show LoCAL, and then display the raw analog-to-digital conversion value. With an empty core

loaded, press ENTER. The display will momentarily show HiCAL, and again display the raw analog-to-digital conversion value. Load a full roll and then press ENTER. If an error occurred (i.e., min value > max value), CAL Error will be displayed and the calibration must be repeated.

3. The input can be verified by monitoring the value of P232 (Ext Dia Ratio). It should range from 0.00% at Core to 100.00% at Max Diameter. Also, P245 (Diameter) should display the actual diameter in user units.

Step 3 Line Speed Calibration

1. Set P24 to 1 to initiate the Analog Input 2 calibration. The display will momentarily show LoCAL, and then display the raw analog-to-digital conversion value. With the line stopped, press ENTER. The display will momentarily show HiCAL, and again display the raw analog-to-digital conversion value. Run the line speed to its maximum desired speed and press ENTER. If an error occurred (i.e., min value > max value), CAL Error will be displayed and the calibration must be repeated.
2. The input can be verified by monitoring the value of P222 (Line Speed). It should read 0.00% when the line is stopped and 100.00% at full speed.
3. While running at full speed, use a hand tachometer to measure the surface speed of a line roller to obtain the material speed (i.e. Ft/min, m/sec, etc…). This value will be needed later. Once complete stop the line.

Proceed to Step 5 in Section 6.15 Torque Calibrations on page 36.

6.5 Config 3: No Loadcell with Roll Revolutions Diameter Comp

This configuration counts the winder revolutions to provide the diameter.

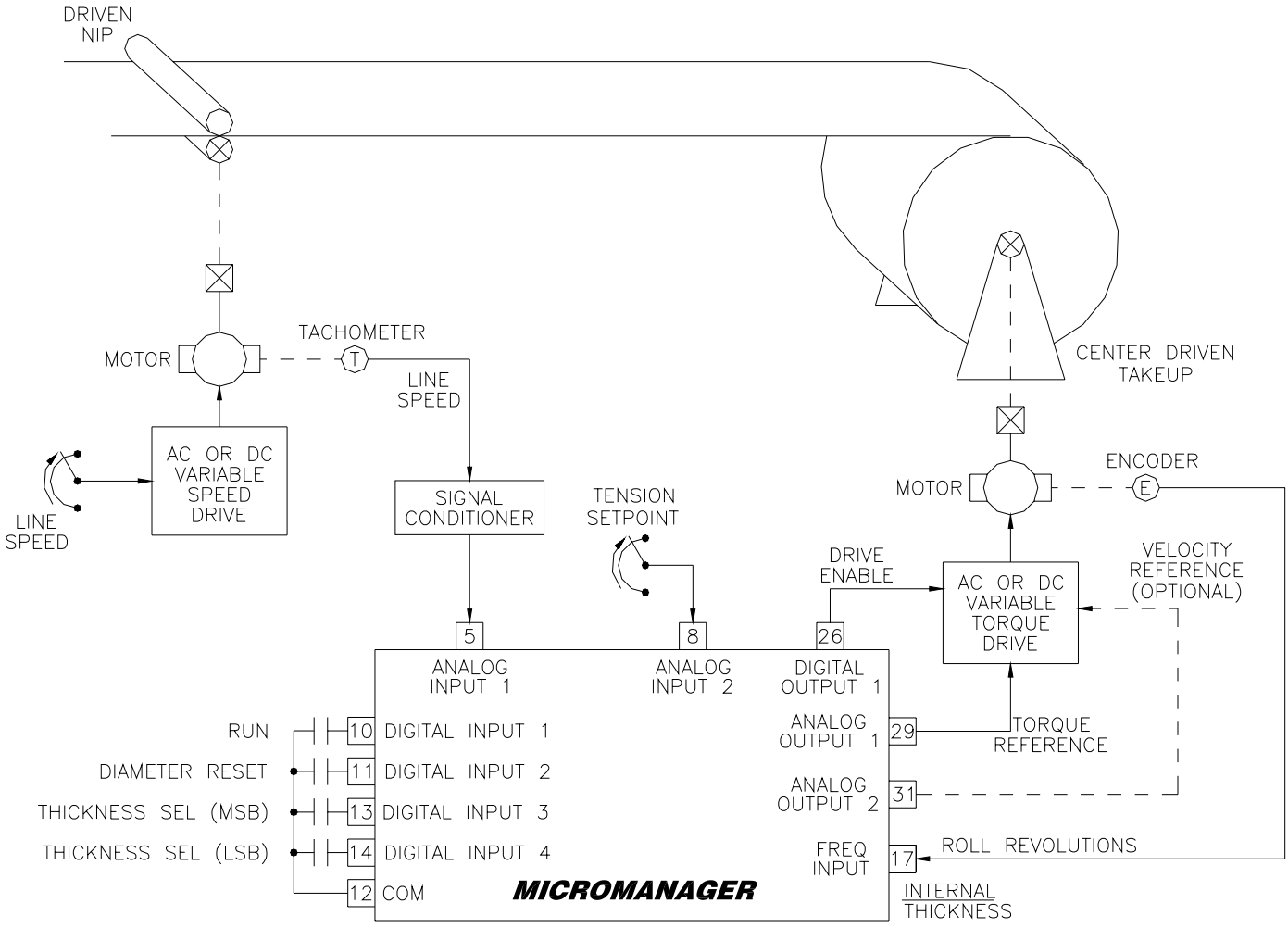

Figure 5: No Loadcell with Roll Revs Diameter Comp (Configuration 3)

Step 1 Wiring & Initialization

1. Make wiring connections using D13548 on page 88. Initially, all material must be **removed** from the machine for setup.
2. Apply power and set P3 (Initialize) to 3.
3. Set the following parameters according to your application. If multiple size core and max diameters are to be used, enter an average value of the core and max diameters that will be used.
   P228 Core Diameter in user units
   P229 Max Diameter in user units

Step 2 Tension Setpoint Calibration

1. Set P24 to 1 to initiate the Analog Input 2 calibration. The display will momentarily show LoCAL, and then display the raw analog-to-digital conversion value. Adjust the potentiometer fully counter clockwise to provide for the minimum input signal and then press ENTER. The display will momentarily show HiCAL, and again display the raw

analog-to-digital conversion value. Adjust the potentiometer fully clockwise to provide for the maximum input signal and press ENTER. If an error occurred (i.e., min value > max value), CAL Error will be displayed and the calibration must be repeated. The input can be verified by monitoring the value of P246 (Tension Setpoint). It should range from 0.00% to 100.00% as the potentiometer moves from min to max.

Step 3 Roll Revolutions Diameter Calibration

1. Set P76 (Pulses/Revolution) to the number of pulses that will be applied to the Frequency Input in one revolution of the roll (winder/unwinder). This value can be obtained by monitoring P74 (Count). Ensure P74 is zero by momentarily applying the Diameter Reset on Digital Input 2. Close Digital Input 1 to enable the MicroManager. Manually rotate the winder/unwinder roll one revolution. Open Digital Input 1 to disable the MicroManager. Set P76 to the value of P74.
2. Enter the material thickness into P239. If multiple material thicknesses are used, enter additional values into P240-P242.

Step 4 Line Speed Calibration

1. Set P23 to 1 to initiate Analog Input 1 calibration. The display will momentarily show LoCAL, and then display the raw analog-to-digital conversion value. With the line stopped, press ENTER. The display will momentarily show HiCAL, and again display the raw analog-to-digital conversion value. Run the line speed to its maximum desired speed and press ENTER. If an error occurred (i.e., min value > max value), CAL Error will be displayed and the calibration must be repeated.
2. The input can be verified by monitoring the value of P222 (Line Speed). It should read 0.00% when the line is stopped and 100.00% at full speed.
3. While running at full speed, use a hand tachometer to measure the surface speed of a line roller to obtain the material speed (i.e. Ft/min, m/sec, etc…). This value will be needed later. Once complete stop the line.

Proceed to Step 5 in Section 6.15 Torque Calibrations on page 36.

6.6 Config 4: No Loadcell with Line Revolutions Diameter Comp

This configuration counts line revolutions to provide the diameter.

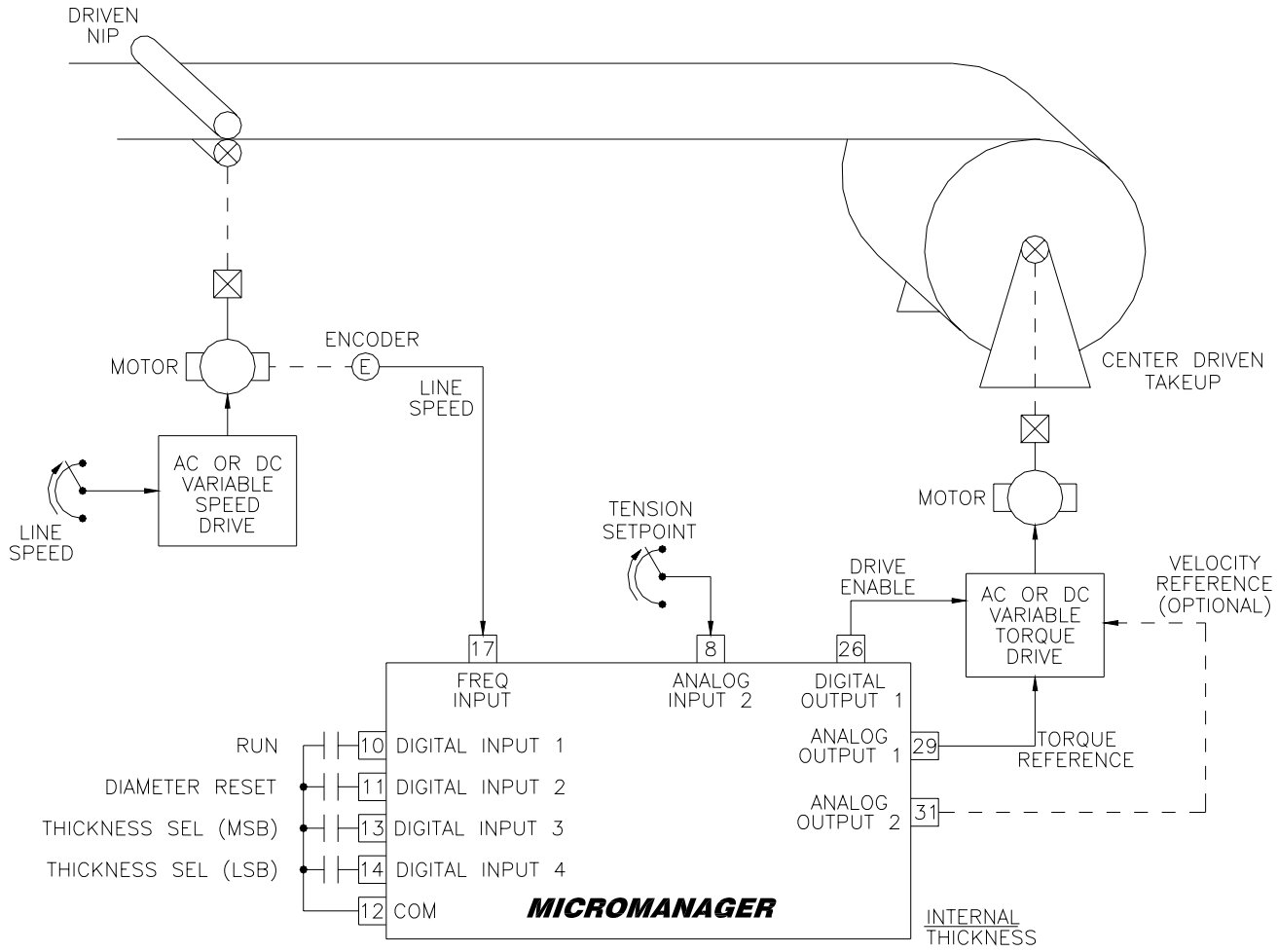

Figure 6: No Loadcell with Line Revolutions Diameter Comp (Configuration 4)

Step 1 Wiring & Initialization

1. Make wiring connections using D13548 on page 88. Initially, all material must be **removed** from the machine for setup.
2. Apply power and set P3 (Initialize) to 4.
3. Set the following parameters according to your application. If multiple size core and max diameters are to be used, enter an average value of the core and max diameters that will be used.
   P228 Core Diameter in user units
   P229 Max Diameter in user units

Step 2 Tension Setpoint Calibration

1. Set P24 to 1 to initiate the Analog Input 2 calibration. The display will momentarily show LoCAL, and then display the raw analog-to-digital conversion value. Adjust the potentiometer fully counter clockwise to provide for the minimum input signal and then press ENTER. The display will momentarily show HiCAL, and again display the raw analog-to-digital conversion value. Adjust the potentiometer fully clockwise to provide for

the maximum input signal and press ENTER. If an error occurred (i.e., min value > max value), CAL Error will be displayed and the calibration must be repeated.
2. The input can be verified by monitoring the value of P246 (Tension Setpoint). It should range from 0.00% to 100.00% as the potentiometer moves from min to max.

Step 3 Line Revolutions Diameter Calibration

1. Set P76 (Pulses/Revolution) to the number of pulses that will be applied to the Frequency Input in one revolution of the line roller. This value can be obtained by monitoring P74 (Count). Ensure P74 is zero by momentarily applying the Diameter Reset on Digital Input 2. Close Digital Input 1 to enable the MicroManager. Manually rotate the line roller one revolution. Open Digital Input 1 to disable the MicroManager. Set P76 to the value of P74.
2. Enter the circumference of the line roller into P231 (Length/Revolution).
3. Enter the material thickness into P239. If multiple material thicknesses are used, enter additional values into P240-P242.

Step 4 Line Speed Calibration

1. Set P68 to 1 to initiate Frequency Input 1 calibration. The display will momentarily show LoCAL, and then display the actual frequency level in Hertz. With the line stopped, press ENTER. The display will momentarily show HiCAL, and again display the actual frequency value. Run the line speed to its maximum desired speed and press ENTER. If an error occurred (i.e., min value > max value), CAL Error will be displayed and the calibration must be repeated.
2. The input can be verified by monitoring the value of P222 (Line Speed). It should read 0.00% when the line is stopped and 100.00% at full speed.
3. While running at full speed, use a hand tachometer to measure the surface speed of a line roller to obtain the material speed (i.e. Ft/min, m/sec, etc…). This value will be needed later. Once complete stop the line.

Proceed to Step 5 in Section 6.15 Torque Calibrations on page 36.

6.7 Config 5: No Loadcell with Line Speed/Roll Speed Diameter Comp (A)

This configuration uses Line Speed and Roll Speed to provide the diameter. This setup is similar to Configurations 6 & 7 except here, Line Speed is provided as an analog signal and Roll Speed is provided as a frequency signal.

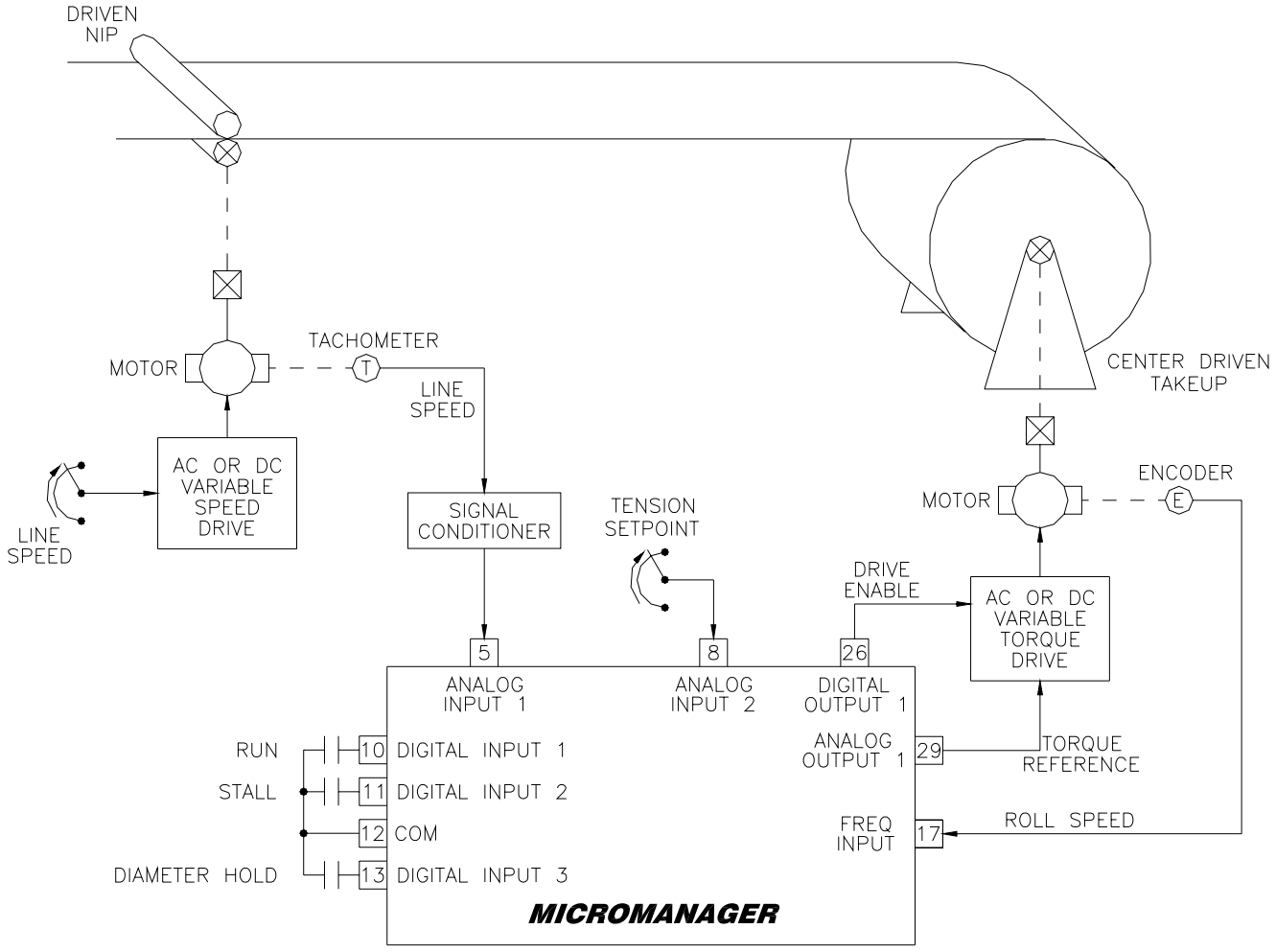

Figure 7: No Loadcell with Line Speed/Roll Speed Diameter Comp (Configuration 5)

Step 1 Wiring & Initialization

1. Make wiring connections using D13548 on page 88. Initially, all material must be **removed** from the machine for setup.
2. Apply power and set P3 (Initialize) to 5.
3. Set the following parameters according to your application. If multiple size core and max diameters are to be used, enter an average value of the core and max diameters that will be used.
   P228 Core Diameter in user units
   P229 Max Diameter in user units

Step 2 Tension Setpoint Calibration

1. Set P24 to 1 to initiate the Analog Input 2 calibration. The display will momentarily show LoCAL, and then display the raw analog-to-digital conversion value. Adjust the potentiometer fully counter clockwise to provide for the minimum input signal and then

press ENTER. The display will momentarily show HiCAL, and again display the raw analog-to-digital conversion value. Adjust the potentiometer fully clockwise to provide for the maximum input signal and press ENTER. If an error occurred (i.e., min value > max value), CAL Error will be displayed and the calibration must be repeated.
2. The input can be verified by monitoring the value of P246 (Tension Setpoint). It should range from 0.00% to 100.00% as the potentiometer moves from min to max.

Step 3 Line Speed Calibration

1. Set P23 to 1 to initiate Analog Input 1 calibration. The display will momentarily show LoCAL, and then display the raw analog-to-digital conversion value. With the line stopped, press ENTER. The display will momentarily show HiCAL, and again display the raw analog-to-digital conversion value. Run the line speed to its maximum desired speed and press ENTER. If an error occurred (i.e., min value > max value), CAL Error will be displayed and the calibration must be repeated.
2. The input can be verified by monitoring the value of P222 (Line Speed). It should read 0.00% when the line is stopped and 100.00% at full speed.
3. While running at full speed, use a hand tachometer to measure the surface speed of a line roller to obtain the material speed (i.e. Ft/min, m/sec, etc…). This value will be needed later. Once complete stop the line.

Step 4 Roll Speed Calibration

1. Temporarily convert the winder drive to velocity mode and load the smallest empty core that will be used.
2. Set P68 to 1 to initiate Frequency Input 1 calibration. The display will momentarily show LoCAL, and then display the actual frequency level in Hertz. With the winder stopped, press ENTER. The display will momentarily show HiCAL, and again display the actual frequency value. Run the winder drive and adjust its speed until the surface speed of the empty winder core matches the line surface speed measured in the previous step above. When a speed match is obtained, press ENTER. If an error occurred (i.e., min value > max value), CAL Error will be displayed and the calibration must be repeated.
3. The input can be verified by monitoring the value of P233 (External Roll Speed). It should read 0.00% when stopped and 100.00% at full surface speed. Once complete stop the line.
4. Convert the drive back to torque mode.

Proceed to Step 5 in Section 6.15 Torque Calibrations on page 36.

6.8 Config 6: No Loadcell with Line Speed/Roll Speed Diameter Comp (B)

This configuration uses Line Speed and Roll Speed to provide the diameter. This setup is similar to Configurations 5 & 7 except here, Line Speed is provided as a frequency signal and Roll Speed is provided as an analog signal.

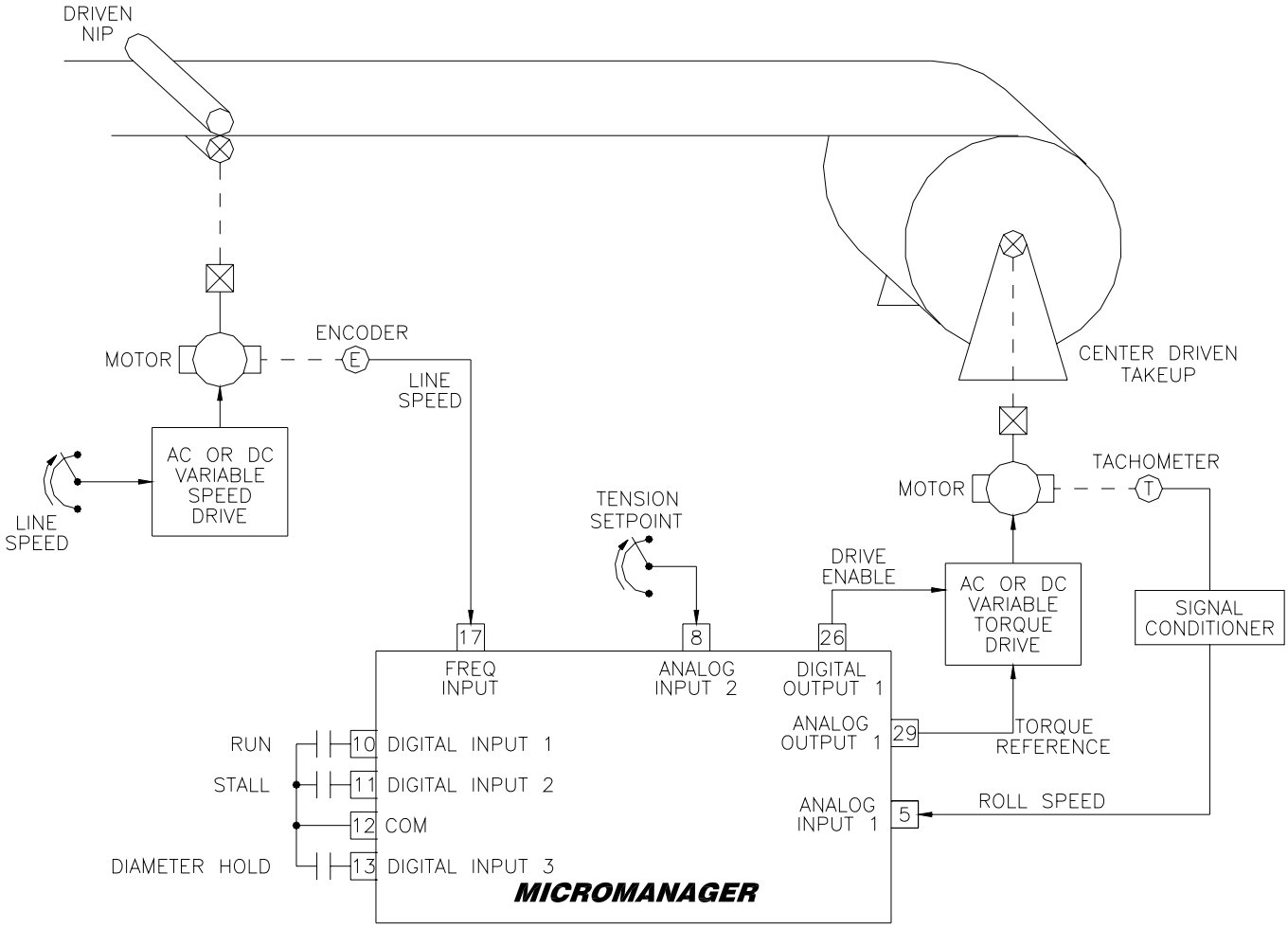

Figure 8: No Loadcell with Line Speed/Roll Speed Diameter Comp (Configuration 6)

Step 1 Wiring & Initialization

1. Make wiring connections using D13548 on page 88. Initially, all material must be **removed** from the machine for setup.
2. Apply power and set P3 (Initialize) to 6.
3. Set the following parameters according to your application. If multiple size core and max diameters are to be used, enter an average value of the core and max diameters that will be used.
   P228 Core Diameter in user units
   P229 Max Diameter in user units

Step 2 Tension Setpoint Calibration

1. Set P24 to 1 to initiate the Analog Input 2 calibration. The display will momentarily show LoCAL, and then display the raw analog-to-digital conversion value. Adjust the potentiometer fully counter clockwise to provide for the minimum input signal and then

press ENTER. The display will momentarily show HiCAL, and again display the raw analog-to-digital conversion value. Adjust the potentiometer fully clockwise to provide for the maximum input signal and press ENTER. If an error occurred (i.e., min value > max value), CAL Error will be displayed and the calibration must be repeated.
2. The input can be verified by monitoring the value of P246 (Tension Setpoint). It should range from 0.00% to 100.00% as the potentiometer moves from min to max.

Step 3 Line Speed Calibration

1. Set P68 to 1 to initiate Frequency Input 1 calibration. The display will momentarily show LoCAL, and then display the actual frequency level in Hertz. With the line stopped, press ENTER. The display will momentarily show HiCAL, and again display the actual frequency value. Run the line speed to its maximum desired speed and press ENTER. If an error occurred (i.e., min value > max value), CAL Error will be displayed and the calibration must be repeated.
2. The input can be verified by monitoring the value of P222 (Line Speed). It should read 0.00% when the line is stopped and 100.00% at full speed.
3. While running at full speed, use a hand tachometer to measure the surface speed of a line roller to obtain the material speed (i.e. Ft/min, m/sec, etc…). This value will be needed later. Once complete stop the line.

Step 4 Roll Speed Calibration

1. Temporarily convert the winder drive to velocity mode and load the smallest empty core that will be used.
2. Set P23 to 1 to initiate Analog Input 1 calibration. The display will momentarily show LoCAL, and then display the raw analog-to-digital conversion value. With the winder stopped, press ENTER. The display will momentarily show HiCAL, and again display the raw analog-to-digital conversion value. Run the winder drive and adjust its speed until the surface speed of the empty winder core matches the line surface speed measured in the previous step above. When a speed match is obtained, press ENTER. If an error occurred (i.e., min value > max value), CAL Error will be displayed and the calibration must be repeated.
3. The input can be verified by monitoring the value of P233 (External Roll Speed). It should read 0.00% when stopped and 100.00% at full surface speed. Once complete stop the line.
4. Convert the drive back to torque mode.

Proceed to Step 5 in Section 6.15 Torque Calibrations on page 36.

6.9 Config 7: No Loadcell with Line Speed/Roll Speed Diameter Comp (C)

This configuration uses Line Speed and Roll Speed to provide the diameter. This setup is similar to Configurations 5 & 6 except here, Line Speed and Roll Speed are provided as analog signals.

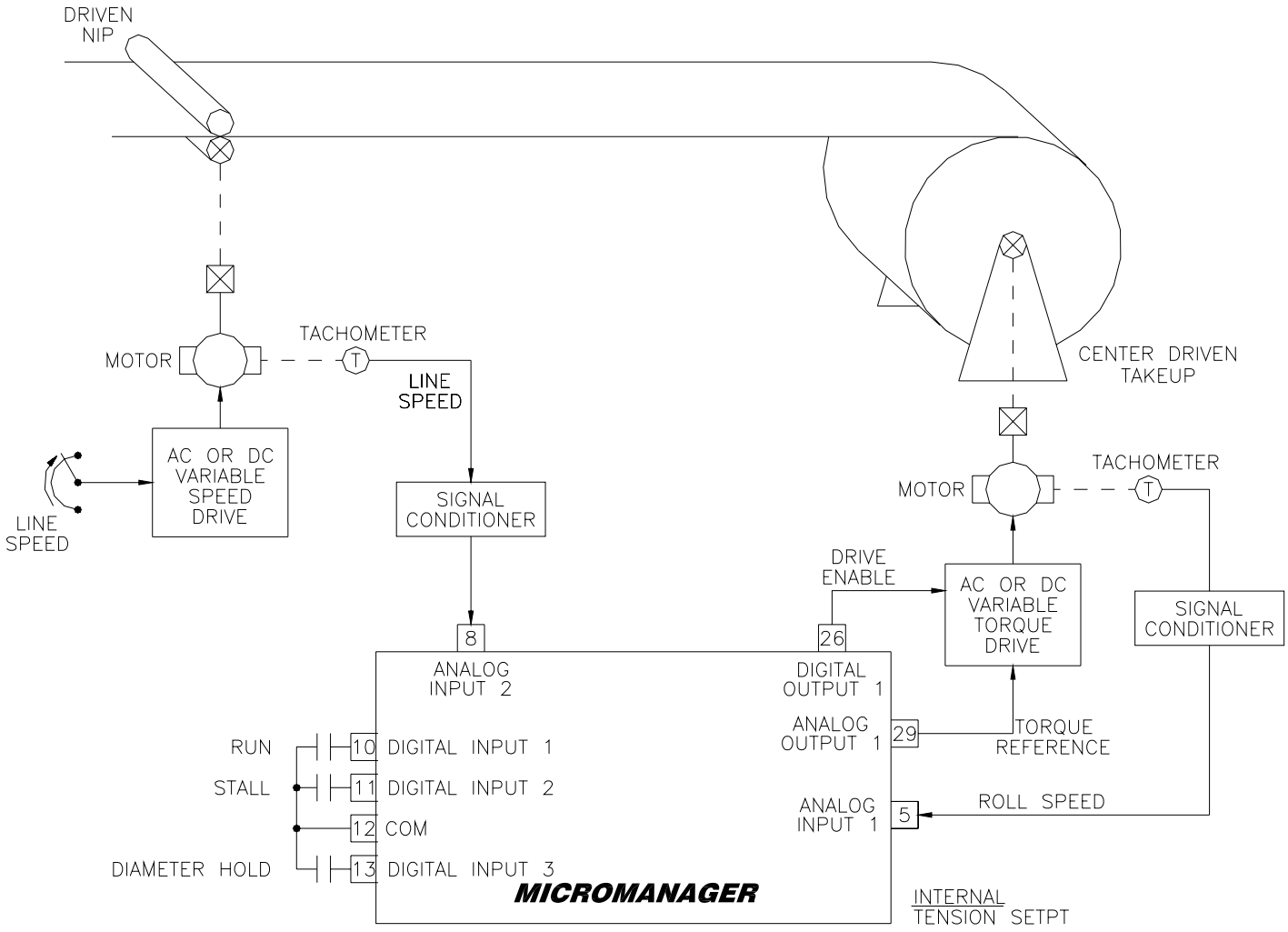

Figure 9: No Loadcell with Line Speed/Roll Speed Diameter Comp (Configuration 7)

Step 1 Wiring & Initialization

1. Make wiring connections using D13548 on page 88. Initially, all material must be **removed** from the machine for setup.
2. Apply power and set P3 (Initialize) to 7.
3. Set the following parameters according to your application. If multiple size core and max diameters are to be used, enter an average value of the core and max diameters that will be used.
   P228 Core Diameter in user units
   P229 Max Diameter in user units

Step 2 Line Speed Calibration

1. Set P24 to 1 to initiate Analog Input 2 calibration. The display will momentarily show LoCAL, and then display the raw analog-to-digital conversion value. With the line

stopped, press ENTER. The display will momentarily show HiCAL, and again display the raw analog-to-digital conversion value. Run the line speed to its maximum desired speed and press ENTER. If an error occurred (i.e., min value > max value), CAL Error will be displayed and the calibration must be repeated.

2. The input can be verified by monitoring the value of P222 (Line Speed). It should read 0.00% when the line is stopped and 100.00% at full speed.
3. While running at full speed, use a hand tachometer to measure the surface speed of a line roller to obtain the material speed (i.e. Ft/min, m/sec, etc…). This value will be needed later. Once complete stop the line.

Step 3 Roll Speed Calibration

1. Temporarily convert the winder drive to velocity mode and load the smallest empty core that will be used.
2. Set P23 to 1 to initiate Analog Input 1 calibration. The display will momentarily show LoCAL, and then display the raw analog-to-digital conversion value. With the winder stopped, press ENTER. The display will momentarily show HiCAL, and again display the raw analog-to-digital conversion value. Run the winder drive and adjust its speed until the surface speed of the empty winder core matches the line surface speed measured in the previous step above. When a speed match is obtained, press ENTER. If an error occurred (i.e., min value > max value), CAL Error will be displayed and the calibration must be repeated.
3. The input can be verified by monitoring the value of P233 (External Roll Speed). It should read 0.00% when stopped and 100.00% at full surface speed. Once complete stop the line.
4. Convert the drive back to torque mode.

Proceed to Step 5 in Section 6.15 Torque Calibrations on page 36.

6.10 Config 8: Loadcell with External Diameter Comp

This configuration uses an external sensor to provide the diameter.

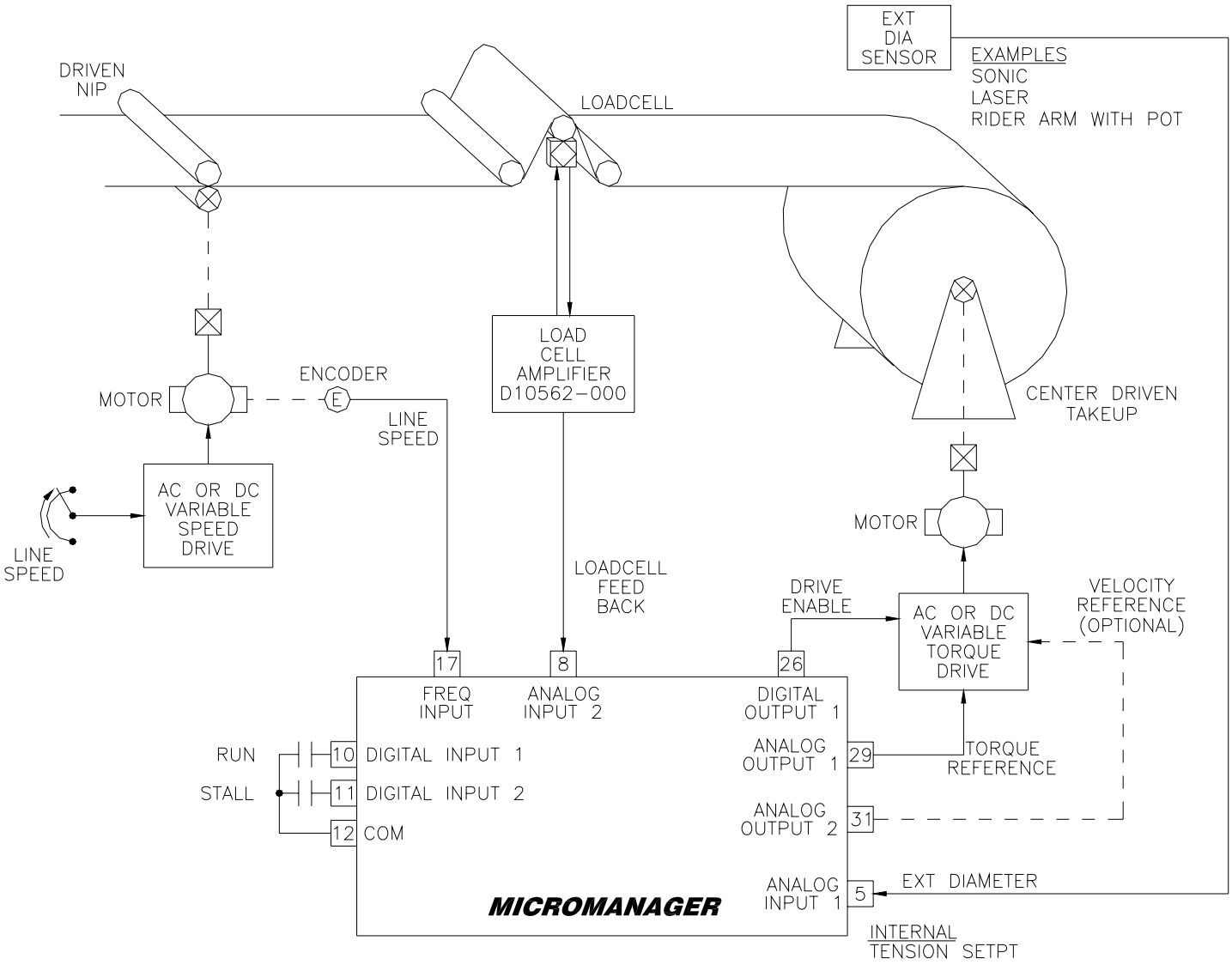

Figure 10: Loadcell with External Diameter Comp (Configuration 8)

Step 1 Wiring & Initialization

1. Make wiring connections using D13548 on page 88. Initially, all material must be **removed** from the machine for setup. The smallest empty core that will be used should be loaded onto the winder. Place winder drive in the torque mode.
2. Apply power and set P3 (Initialize) to 8.
3. Set the following parameters according to your application. If multiple size core and max diameters are to be used, enter the smallest core diameter and the largest max diameter.
   P228 Core Diameter in user units
   P229 Max Diameter in user units

Step 2 External Diameter Calibration

1. The diameter sensor should be configured to provide a minimum signal at core and a

maximum signal at full roll.

2. Set P23 to 1 to initiate Analog Input 1 calibration. The display will momentarily show LoCAL, and then display the raw analog-to-digital conversion value. With an empty core loaded, press ENTER. The display will momentarily show HiCAL, and again display the raw analog-to-digital conversion value. Load a full roll and then press ENTER. If an error occurred (i.e., min value > max value), CAL Error will be displayed and the calibration must be repeated.
3. The input can be verified by monitoring the value of P232 (Ext Dia Ratio). It should range from 0.00% at Core to 100.00% at Max Diameter. Also, P245 (Diameter) should display the actual diameter in user units.

Step 3 Loadcell Feedback Calibration

1. Calibrate the loadcell amplifier card per the manufacturer's instructions. A typical setup should produce 0V with no load and 10V with full load. Full load is typically simulated by hanging a known calibration weight via ropes or chains threaded in the normal material path.
2. Set P24 to 1 to initiate the Analog Input 2 calibration. The display will momentarily show LoCAL, and then display the raw analog-to-digital conversion value. Remove any loading from the loadcell to produce the minimum input signal and then press ENTER. The display will momentarily show HiCAL, and again display the raw analog-to-digital conversion value. Apply full load to the loadcell to produce the maximum input signal and press ENTER. If an error occurred (i.e., min value > max value), CAL Error will be displayed and the calibration must be repeated.
3. The input can be verified by monitoring the value of P206 (PID Feedback). It should read 0.00% with no load and 100.00% with full load.

Step 4 Line Speed Calibration

1. Set P68 to 1 to initiate Frequency Input calibration. The display will momentarily show LoCAL, and then display the actual frequency level in Hertz. With the line stopped, press ENTER. The display will momentarily show HiCAL, and again display the actual frequency value. Run the line speed to its maximum desired speed and press ENTER. If an error occurred (i.e., min value > max value), CAL Error will be displayed and the calibration must be repeated.
2. The input can be verified by monitoring the value of P222 (Line Speed). It should read 0.00% when the line is stopped and 100.00% at full speed.
3. While running at full speed, use a hand tachometer to measure the surface speed of a line roller to obtain the material speed (i.e. Ft/min, m/sec, etc…). This value will be needed later. Once complete stop the line.

Proceed to Step 5 in Section 6.15 Torque Calibrations on page 36.

6.11 Config 9: Loadcell with Roll Revolutions Diameter Comp

This configuration counts the winder revolutions to provide the diameter.

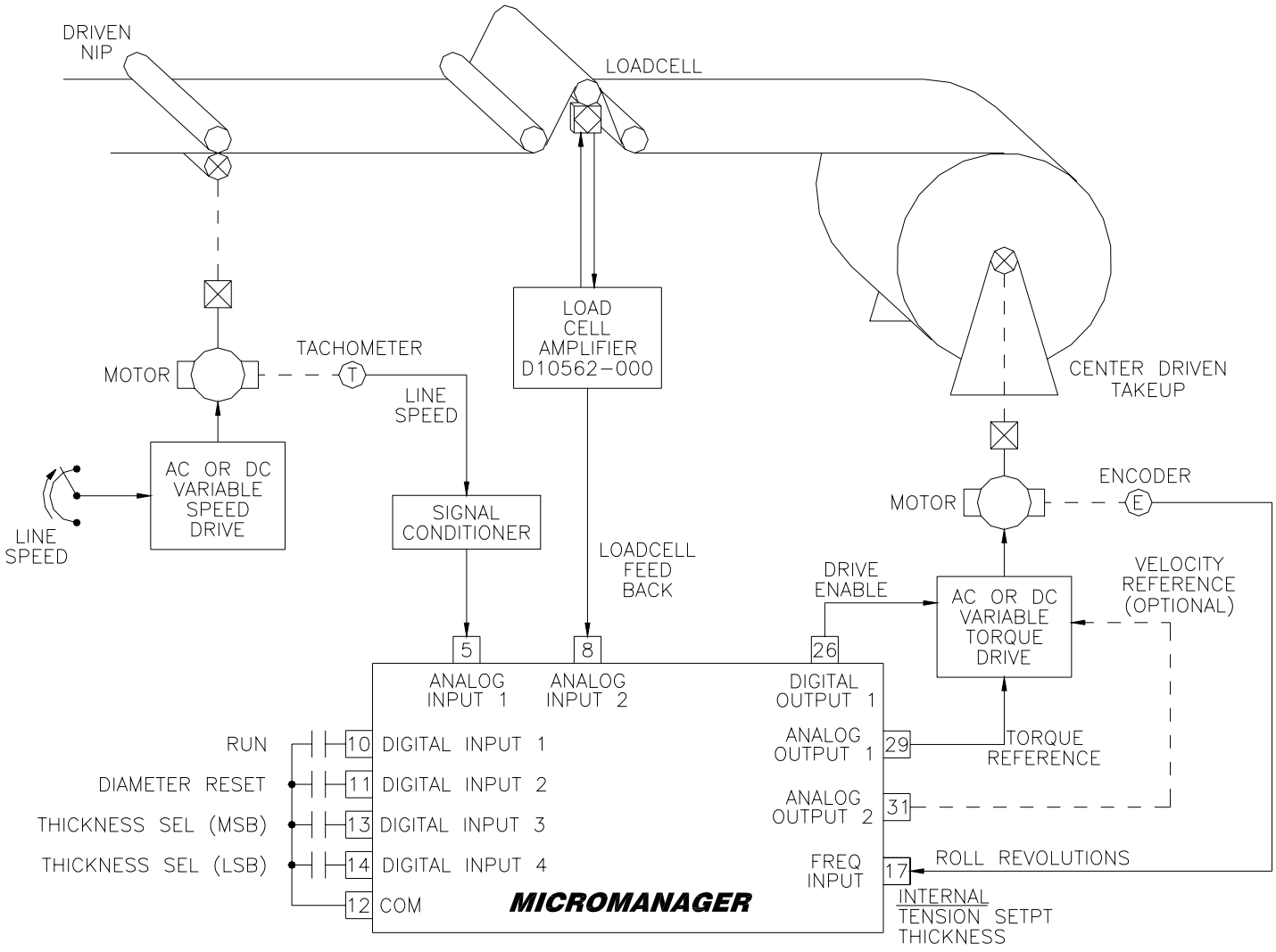

Figure 11: Loadcell with Roll Revolutions Diameter Comp (Configuration 9)

Step 1 Wiring & Initialization

1. Make wiring connections using D13548 on page 88. Initially, all material must be **removed** from the machine for setup.
2. Apply power and set P3 (Initialize) to 9.
3. Set the following parameters according to your application. If multiple size core and max diameters are to be used, enter an average value of the core and max diameters that will be used.
   P228 Core Diameter in user units
   P229 Max Diameter in user units

Step 2 Roll Revolutions Diameter Calibration

1. Set P76 (Pulses/Revolution) to the number of pulses that will be applied to the Frequency Input in one revolution of the roll (winder/unwinder). This value can be obtained by monitoring P74 (Count). Ensure P74 is zero by momentarily applying the

Diameter Reset on Digital Input 2. Close Digital Input 1 to enable the MicroManager. Manually rotate the winder/unwinder roll one revolution. Open Digital Input 1 to disable the MicroManager. Set P76 to the value of P74.
2. Enter the material thickness into P239. If multiple material thicknesses are used, enter additional values into P240-P242.

Step 3 Loadcell Feedback Calibration

1. Calibrate the loadcell amplifier card per the manufacturer's instructions. A typical setup should produce 0V with no load and 10V with full load. Full load is typically simulated by hanging a known calibration weight via ropes or chains threaded in the normal material path.
2. Set P24 to 1 to initiate the Analog Input 2 calibration. The display will momentarily show LoCAL, and then display the raw analog-to-digital conversion value. Remove any loading from the loadcell to produce the minimum input signal and then press ENTER. The display will momentarily show HiCAL, and again display the raw analog-to-digital conversion value. Apply full load to the loadcell to produce the maximum input signal and press ENTER. If an error occurred (i.e., min value > max value), CAL Error will be displayed and the calibration must be repeated.
3. The input can be verified by monitoring the value of P206 (PID Feedback). It should read 0.00% with no load and 100.00% with full load.

Step 4 Line Speed Calibration

1. Set P23 to 1 to initiate Analog Input 1 calibration. The display will momentarily show LoCAL, and then display the raw analog-to-digital conversion value. With the line stopped, press ENTER. The display will momentarily show HiCAL, and again display the raw analog-to-digital conversion value. Run the line speed to its maximum desired speed and press ENTER. If an error occurred (i.e., min value > max value), CAL Error will be displayed and the calibration must be repeated.
2. The input can be verified by monitoring the value of P222 (Line Speed). It should read 0.00% when the line is stopped and 100.00% at full speed.
3. While running at full speed, use a hand tachometer to measure the surface speed of a line roller to obtain the material speed (i.e. Ft/min, m/sec, etc…). This value will be needed later. Once complete stop the line.

Proceed to Step 5 in Section 6.15 Torque Calibrations on page 36.

6.12 Config 10: Loadcell with Line Revolutions Diameter Comp

This configuration counts line revolutions to provide the diameter.

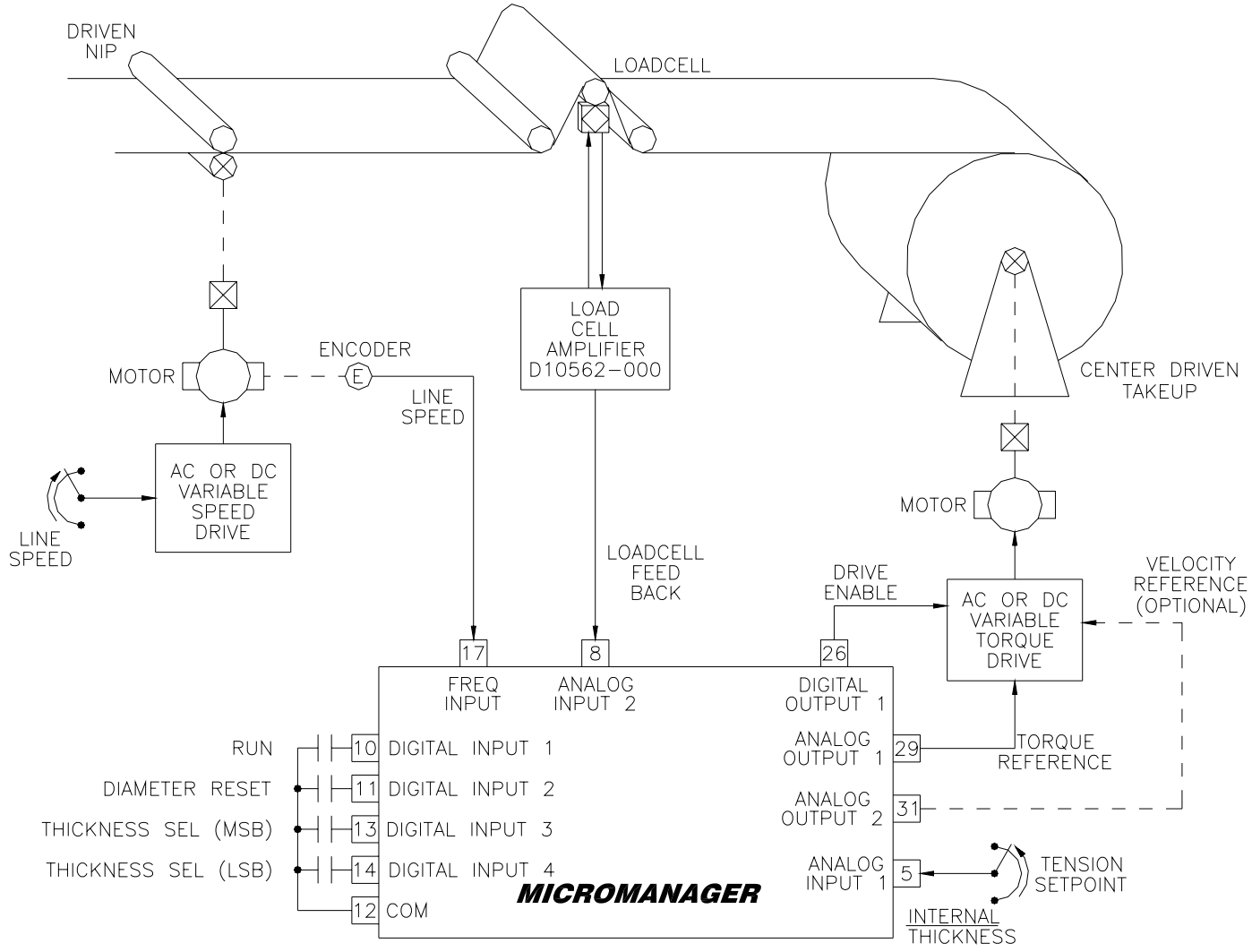

Figure 12: Loadcell with Line Revolutions Diameter Comp (Configuration 10)

Step 1 Wiring & Initialization

1. Make wiring connections using D13548 on page 88. Initially, all material must be **removed** from the machine for setup.
2. Apply power and set P3 (Initialize) to 10.
3. Set the following parameters according to your application. If multiple size core and max diameters are to be used, enter an average value of the core and max diameters that will be used.
   P228 Core Diameter in user units
   P229 Max Diameter in user units

Step 2 Line Revolutions Diameter Calibration

1. Set P76 (Pulses/Revolution) to the number of pulses that will be applied to the Frequency Input in one revolution of the line roller. This value can be obtained by

monitoring P74 (Count). Ensure P74 is zero by momentarily applying the Diameter Reset on Digital Input 2. Close Digital Input 1 to enable the MicroManager. Manually rotate the line roller one revolution. Open Digital Input 1 to disable the MicroManager. Set P76 to the value of P74.
2. Enter the circumference of the line roller into P231 (Length/Revolution).
3. Enter the material thickness into P239. If multiple material thicknesses are used, enter additional values into P240-P242.

Step 3 Loadcell Feedback Calibration

1. Calibrate the loadcell amplifier card per the manufacturer's instructions. A typical setup should produce 0V with no load and 10V with full load. Full load is typically simulated by hanging a known calibration weight via ropes or chains threaded in the normal material path.
2. Set P24 to 1 to initiate the Analog Input 2 calibration. The display will momentarily show LoCAL, and then display the raw analog-to-digital conversion value. Remove any loading from the loadcell to produce the minimum input signal and then press ENTER. The display will momentarily show HiCAL, and again display the raw analog-to-digital conversion value. Apply full load to the loadcell to produce the maximum input signal and press ENTER. If an error occurred (i.e., min value > max value), CAL Error will be displayed and the calibration must be repeated.
3. The input can be verified by monitoring the value of P206 (PID Feedback). It should read 0.00% with no load and 100.00% with full load.

Step 4 Line Speed Calibration

1. Set P68 to 1 to initiate Frequency Input 1 calibration. The display will momentarily show LoCAL, and then display the actual frequency level in Hertz. With the line stopped, press ENTER. The display will momentarily show HiCAL, and again display the actual frequency value. Run the line speed to its maximum desired speed and press ENTER. If an error occurred (i.e., min value > max value), CAL Error will be displayed and the calibration must be repeated.
2. The input can be verified by monitoring the value of P222 (Line Speed). It should read 0.00% when the line is stopped and 100.00% at full speed.
3. While running at full speed, use a hand tachometer to measure the surface speed of a line roller to obtain the material speed (i.e. Ft/min, m/sec, etc…). This value will be needed later. Once complete stop the line.

Proceed to Step 5 in Section 6.15 Torque Calibrations on page 36.

6.13 Config 11: Loadcell with Line Speed/Roll Speed Diameter Comp (A)

This configuration uses Line Speed and Roll Speed to provide the diameter. This setup is similar to Configuration 12 except here, Line Speed is provided as an analog signal and Roll Speed is provided as a frequency signal.

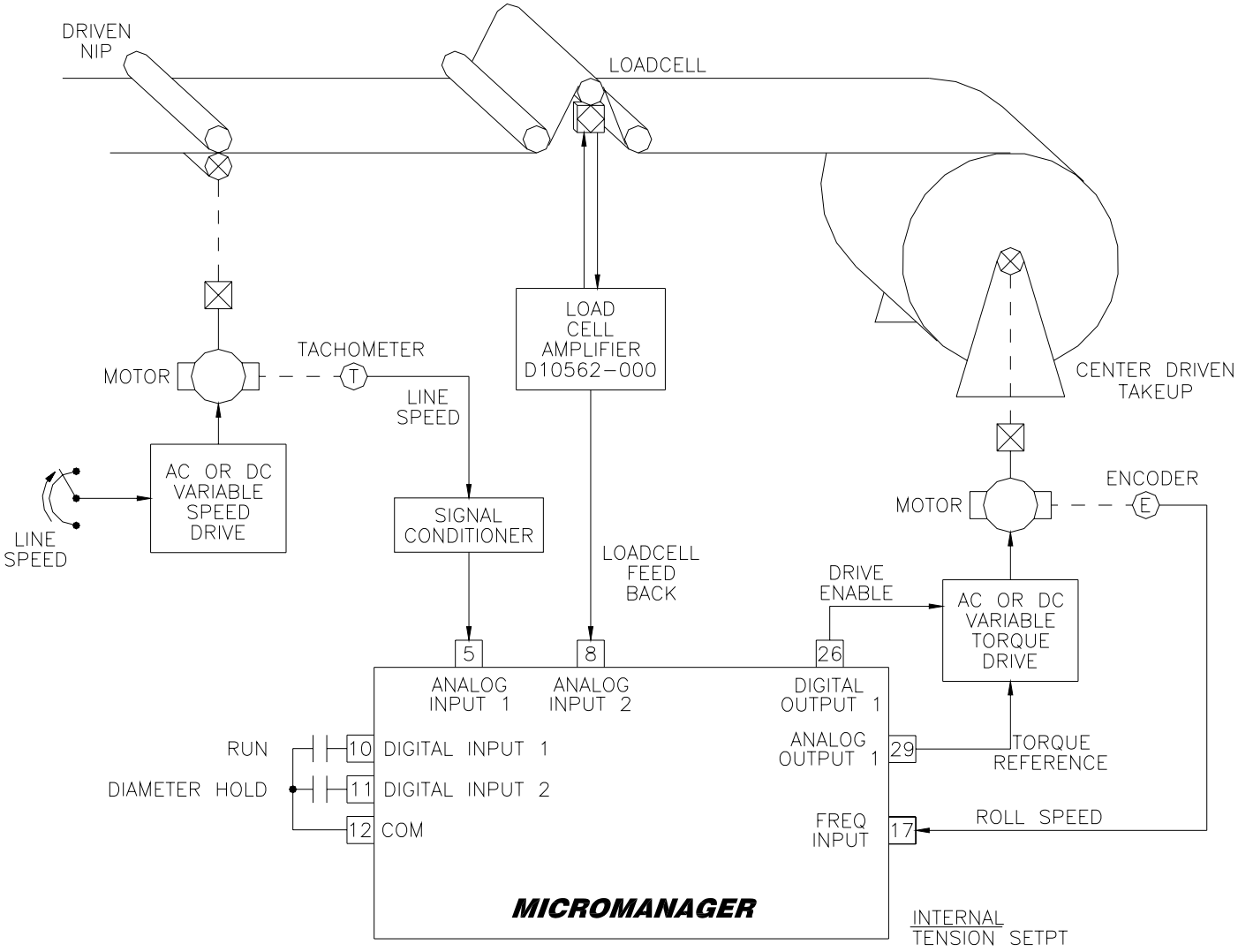

Figure 13: Loadcell with Line Speed/Roll Speed Diameter (Configuration 11)

Step 1 Wiring & Initialization

1. Make wiring connections using D13548 on page 88. Initially, all material must be **removed** from the machine for setup.
2. Apply power and set P3 (Initialize) to 11.
3. Set the following parameters according to your application. If multiple size core and max diameters are to be used, enter an average value of the core and max diameters that will be used.
   P228 Core Diameter in user units
   P229 Max Diameter in user units

Step 2 Loadcell Feedback Calibration

1. Calibrate the loadcell amplifier card per the manufacturer's instructions. A typical setup should produce 0V with no load and 10V with full load. Full load is typically simulated by hanging a known calibration weight via ropes or chains threaded in the normal material path.
2. Set P24 to 1 to initiate the Analog Input 2 calibration. The display will momentarily show LoCAL, and then display the raw analog-to-digital conversion value. Remove any loading from the loadcell to produce the minimum input signal and then press ENTER. The display will momentarily show HiCAL, and again display the raw analog-to-digital conversion value. Apply full load to the loadcell to produce the maximum input signal and press ENTER. If an error occurred (i.e., min value > max value), CAL Error will be displayed and the calibration must be repeated.
3. The input can be verified by monitoring the value of P206 (PID Feedback). It should read 0.00% with no load and 100.00% with full load.

Step 3 Line Speed Calibration

1. Set P23 to 1 to initiate Analog Input 1 calibration. The display will momentarily show LoCAL, and then display the raw analog-to-digital conversion value. With the line stopped, press ENTER. The display will momentarily show HiCAL, and again display the raw analog-to-digital conversion value. Run the line speed to its maximum desired speed and press ENTER. If an error occurred (i.e., min value > max value), CAL Error will be displayed and the calibration must be repeated.
2. The input can be verified by monitoring the value of P222 (Line Speed). It should read 0.00% when the line is stopped and 100.00% at full speed.
3. While running at full speed, use a hand tachometer to measure the surface speed of a line roller to obtain the material speed (i.e. Ft/min, m/sec, etc…). This value will be needed later. Once complete stop the line.

Step 4 Roll Speed Calibration

1. Temporarily convert the winder drive to velocity mode and load the smallest empty core that will be used.
2. Set P68 to 1 to initiate Frequency Input 1 calibration. The display will momentarily show LoCAL, and then display the actual frequency level in Hertz. With the winder stopped, press ENTER. The display will momentarily show HiCAL, and again display the actual frequency value. Run the winder drive and adjust its speed until the surface speed of the empty winder core matches the line surface speed measured in the previous step above. When a speed match is obtained, press ENTER. If an error occurred (i.e., min value > max value), CAL Error will be displayed and the calibration must be repeated.
3. The input can be verified by monitoring the value of P233 (External Roll Speed). It should read 0.00% when stopped and 100.00% at full surface speed. Once complete stop the line.
4. Convert the drive back to torque mode.

Proceed to Step 5 in Section 6.15 Torque Calibrations on page 36.

6.14 Config 12: Loadcell with Line Speed/Roll Speed Diameter Comp (B)

This configuration uses Line Speed and Roll Speed to provide the diameter. This setup is similar to Configuration 11 except here, Line Speed is provided as a frequency signal and Roll Speed is provided as an analog signal.

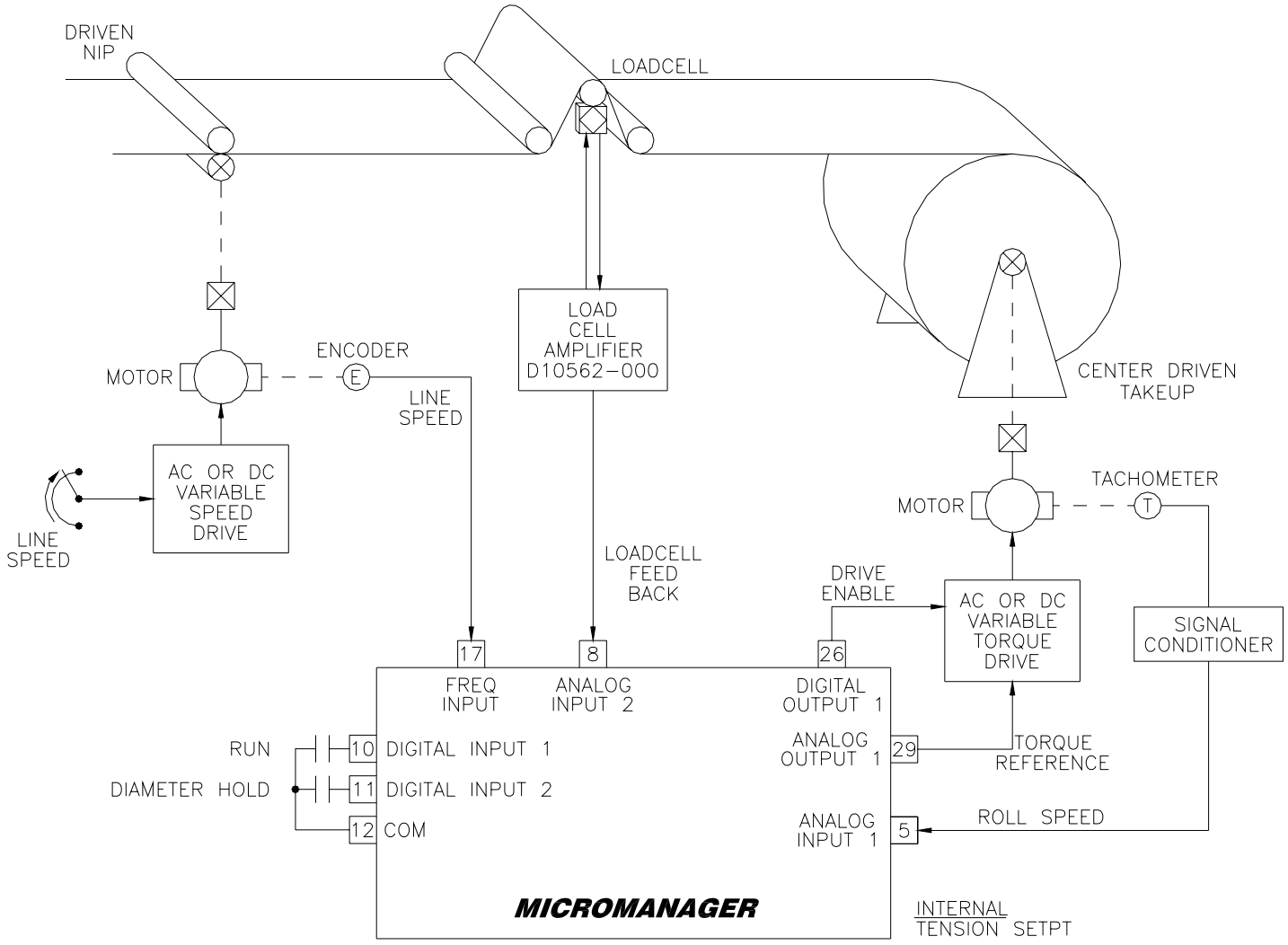

Figure 14: Loadcell with Line Speed/Roll Speed Diameter (Configuration 12)

Step 1 Wiring & Initialization

1. Make wiring connections using D13548 on page 88. Initially, all material must be **removed** from the machine for setup.
2. Apply power and set P3 (Initialize) to 12.
3. Set the following parameters according to your application. If multiple size core and max diameters are to be used, enter an average value of the core and max diameters that will be used.
   P228 Core Diameter in user units
   P229 Max Diameter in user units

Step 2 Loadcell Feedback Calibration

1. Calibrate the loadcell amplifier card per the manufacturer's instructions. A typical setup should produce 0V with no load and 10V with full load. Full load is typically simulated by hanging a known calibration weight via ropes or chains threaded in the normal material path.
2. Set P24 to 1 to initiate the Analog Input 2 calibration. The display will momentarily show LoCAL, and then display the raw analog-to-digital conversion value. Remove any loading from the loadcell to produce the minimum input signal and then press ENTER. The display will momentarily show HiCAL, and again display the raw analog-to-digital conversion value. Apply full load to the loadcell to produce the maximum input signal and press ENTER. If an error occurred (i.e., min value > max value), CAL Error will be displayed and the calibration must be repeated.
3. The input can be verified by monitoring the value of P206 (PID Feedback). It should read 0.00% with no load and 100.00% with full load.

Step 3 Line Speed Calibration

1. Set P68 to 1 to initiate Frequency Input 1 calibration. The display will momentarily show LoCAL, and then display the actual frequency level in Hertz. With the line stopped, press ENTER. The display will momentarily show HiCAL, and again display the actual frequency value. Run the line speed to its maximum desired speed and press ENTER. If an error occurred (i.e., min value > max value), CAL Error will be displayed and the calibration must be repeated.
2. The input can be verified by monitoring the value of P222 (Line Speed). It should read 0.00% when the line is stopped and 100.00% at full speed.
3. While running at full speed, use a hand tachometer to measure the surface speed of a line roller to obtain the material speed (i.e. Ft/min, m/sec, etc…). This value will be needed later. Once complete stop the line.

Step 4 Roll Speed Calibration

1. Temporarily convert the winder drive to velocity mode and load the smallest empty core that will be used.
2. Set P23 to 1 to initiate Analog Input 1 calibration. The display will momentarily show LoCAL, and then display the raw analog-to-digital conversion value. With the winder stopped, press ENTER. The display will momentarily show HiCAL, and again display the raw analog-to-digital conversion value. Run the winder drive and adjust its speed until the surface speed of the empty winder core matches the line surface speed measured in the previous step above. When a speed match is obtained, press ENTER. If an error occurred (i.e., min value > max value), CAL Error will be displayed and the calibration must be repeated.
3. The input can be verified by monitoring the value of P233 (External Roll Speed). It should read 0.00% when stopped and 100.00% at full surface speed. Once complete stop the line.
4. Convert the drive back to torque mode.

Proceed to Step 5 in Section 6.15 Torque Calibrations on page 36.

6.15 Torque Calibrations

Step 5 Stall (Optional)

Stall mode is available on all configurations except 3, 4, 9 & 10 (contact Carotron if Stall mode is required in one of these configurations). When the unit is in Stall mode, a set torque level is output to the winder drive. The Run input can override the Stall input.

1. Ensure MicroManager is not in the Run mode (de-activate Digital Input 1).
2. Enter Stall mode by activating Digital Input 2.
3. Adjust P259 to set the desired output torque level.

De-activate Digital Input 2 to exit Stall.

Step 6 Torque Bias Adjustment

1. Ensure winder drive is in torque mode.
2. Ensure PID is disabled by setting P208 (PID Trim) to zero.
3. Set the Tension Setpoint to zero (either external tension pot or P246).
4. Place MicroManager and winder drive in the Run mode (Digital Input 1).
5. Increase P301(Torque Bias) until the winder begins to turn slowly, then decrease until the winder stops. Note: when adjusting P301, the new value must entered for it to take affect.
6. Disable the MicroManager and winder drive.

Step 7 Friction Comp Adjustment

1. Run line drive at 100% speed.
2. Slowly increase P299 (Friction Comp) until the surface speed of the empty winder matches the line speed measured in Step 4 above. **Warning! If P299 is set too high, the torque mode winder drive will 'run away'!** Use care to only set P299 high enough to obtain a speed match. Once complete, stop the line.

Step 8 Inertia Compensation

1. Initially set P295 based on the current rate of line acceleration. See Table 8 on page 57.
2. Load scrap material into the machine and start machine with zero reference. Adjust tension pot to desired level. Increase line speed and observe the material during acceleration. If slackening of the material is noticed, increase P296. Stop machine and repeat. Slackening of the material indicates too little inertia compensation. Increase P296. Likewise, tightening indicates too much compensation. Decrease P296.

Step 9 Operation Checks

1. Adjust the tension setpoint (either external tension pot or P246) until the desired tension is placed onto the material. As the diameter builds, the MicroManager increases the torque reference to the winder drive to maintain constant tension on the material.

Step 10 PID (Applies to Configurations 8-12 only)

Up to this point, the MicroManager has been running in an 'open loop' mode. The following steps enable the 'closed loop' loadcell feedback mode of operation.

1. With the MicroManager disabled, initially set P208 (PID Trim) to 15.00%.
2. Run machine and monitor the filtered PID feedback on P269. In normal operation, the value of P269 should be approximately equal to the PID setpoint value in P205.
3. If needed, adjust P196 (Proportional Gain) and P197 (Integral Time) to stabilize the P269 value.

4. Monitor P214 (Integral Status). When properly calibrated, this value should never read ±100.00%. If this occurs, increase P208 (PID Trim).

Step 11 Final Checks

1. If taper tension is required, refer to the Taper Tension Adjustment procedure on 37.
2. Configure drive for an upper speed limit or machine with a web break detection. See 6.17 Upper Speed Limit on page 37.
3. Once desired operation is obtained, set P1 to 1 to save parameters. Document the parameter changes. Refer to Section 6.18 MicroManager Configuration Documentation on page 38.

6.16 Taper Tension Adjustment

With winders, many times it is necessary to build tight packages with constant tension near the core and then taper (or decrease) the tension on the outer layers of the roll to prevent wrinkling and/or telescoping. The MicroManager can provide taper tension on loadcell applications, and on air-loaded dancer systems.

1. Monitor the roll as it is being built and make note of the diameter level at which constant tension problems begin to occur.
2. Set P247 (Taper Diameter) so that the tension will begin tapering at a level prior to the problem area observed in the previous step.
3. Set P248 (Taper Percentage) to control how much tension is reduced.
4. Wind another roll and make adjustments to P247 and P248 as necessary.

6.17 Upper Speed Limit

One drawback of torque mode operation is the winder drive's speed will run away if a material break occurs. Some torque mode drives support a speed reference that can be used as an upper speed limit. Thus, if a material break occurs, the drive will run at this speed limit instead of running away. **If the winder drive does not support this feature, or Configurations 5, 6, 7, 11 or 12 are used, some type of web break detection sensor needs to be utilized to stop the machine when a web break occurs.**

Use the procedure below to setup the drive's upper speed limit scaling so that it runs approximately 15-20% faster than line speed.

1. Configure the winder drive for both torque mode operation with an upper speed limit input.
2. Remove material from the machine.
3. Set P126 to 1 to force the torque reference output to 100% (10V) so the drive will be forced to run at the speed limit.
4. Enable the MicroManager and run the line up to 100% speed. Since the speed reference output from the MicroManager is proportional to line speed, the winder drive should also be running. Use the winder drive's max speed adjustment to set the empty core surface speed 15-20% higher than line speed. Once complete, stop line drive and disable

MicroManager.
5. Set P126 back to 0.

6.18 MicroManager Configuration Documentation

It is recommended that, once setup is complete, the configuration of the MicroManager be documented. This can be done on a PC with the MicroManager software (available online at www.carotron.com) or manually by following the procedure below.

Set P14 (List Modified Parameters) to 1. The display will show a list of all the parameters whose value has been modified from the factory preset. The Up and Down buttons are used to scroll through the list. Once the changed parameters have been documented, press the Enter button to exit.

Next, scroll through the parameters and display the value of each of the modified parameters that were listed above. Table 15 on page 67 provides a User column where the parameter values may be noted.

7 Programming & Adjustments

The MicroManager's parameters are grouped into numerous functional blocks. The blocks can be interconnected via links in different configurations to perform different application tasks. Please refer to drawing D13539 Sheet 1 on page 90 for an overall view of all the blocks. Each parameter has a descriptive name and a tag (or number) identifier. The following sections contain each software block diagram and descriptions of each parameter function. Refer to Figure 15 below for key conventions that are used in the block diagrams. Each parameter is one of three types: Read-Only (RO), Inhibit Change while Running (ICR), or Read-Write (RW). ICR parameters can be changed only when the unit is not in the Run mode. Remember that parameter changes must be saved by setting P1 to 1.

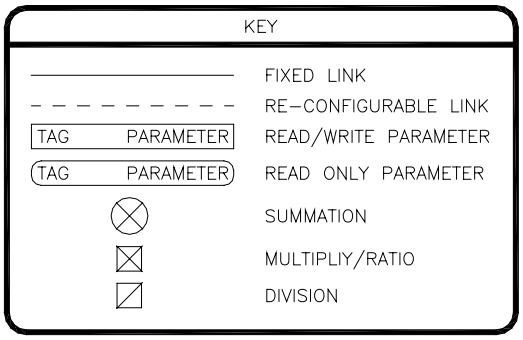

Figure 15: Block Diagram Key

7.1 Analog Inputs

The MicroManager has two configurable analog (voltage) inputs. Each input can be configured to write to any Read/Write parameter.

Destination (15-16, ICR, default: 0)
The tag of the target parameter that the analog input will control.

Status (17-18, Read Only)
The raw 12 bit analog-to-digital conversion (ADC) value.

Input Voltage	Status
12.0	4092
9.0	3069
6.0	2046
3.0	1023
0.0	0

Table 3: Analog Input Status Readings

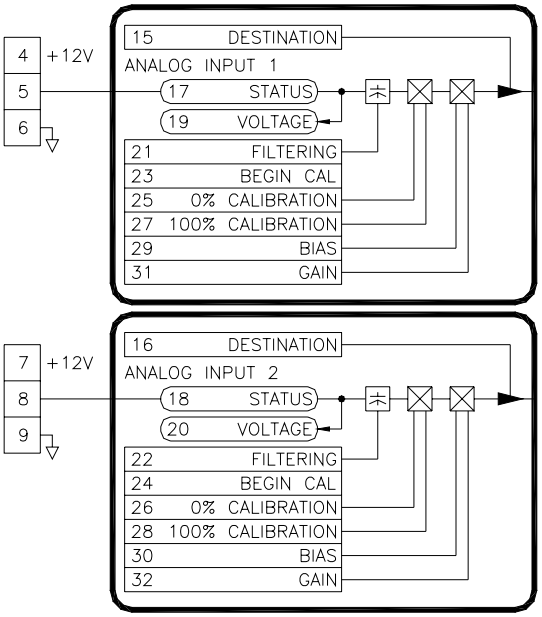

Figure 16: Analog Inputs

Voltage (19-20, Read Only)
The voltage level on the analog input.

Filtering (21-22, Read/Write, default: 0)
An averaging filter can be applied to the incoming signal to reduce the effects of noise. Increasing the value increases the filtering.

Begin Calibration (23-24, ICR, default: 0)
For proper measurement, the analog input must be calibrated to the range of the incoming signal. Calibration is performed by setting the **0% Calibration** and **100% Calibration** parameters. This can be done manually (see below) or by allowing the MicroManager to measure the levels.

Calibration is started by setting this parameter to 1. After the Enter button is pressed, the display will momentarily display LoCAL (Low Calibration). The display will then change showing the ADC value. The minimum signal should be applied to the input. When the Enter button is pressed, the ADC value will be recorded.

The display will then momentarily display HiCal (High Calibration) and then show the ADC value. The maximum signal should be applied to the input. When the Enter button is pressed, the ADC value will be recorded.

If the low calibration value is less than the high calibration value, the low and high value will be stored in the **0% Calibration** and **100% Calibration** parameters. Otherwise, the display will show CAL Error and the calibration values will be discarded and the routine will need to be repeated.

0% Calibration (25-26, Read/Write, default: 0)
This calibration value defines the minimum input signal. This value corresponds to the 12 bit ADC value when the analog input is at its minimum level. For proper operation, the **0% Calibration** value must be less than the **100% Calibration** value. Use the following formula to set the value manually.

$$0\%\,\text{Calibration} = \frac{\text{Minimum Input Voltage}}{12\text{V}} \times 4092$$

100% Calibration (27-28, Read/Write, default: 4092)
This calibration value defines the maximum input signal. This value corresponds to the 12 bit ADC value when the analog input is at its maximum level. For proper operation, the **100% Calibration** value must be greater than the **0% Calibration** value. Use the following formula to set the value manually.

$$100\%\,\text{Calibration} = \frac{\text{Maximum Input Voltage}}{12\text{V}} \times 4092$$

Bias (29-30, Read/Write, default: 0.00%)
This parameter defines the value sent to the target parameter when the input signal is at or below 0%.

Gain (31-32, Read/Write, default: 100.00%)
This parameter defines the value sent to the target parameter when the input signal is at or above 100%.

7.2 Digital Inputs

The MicroManager has four configurable digital inputs. Each input can write one of two values to any Read/Write parameter. Terminal 15 is used to select Sinking or Sourcing logic. Refer to D13548 on page 87 for more details.

Destination (41-44, ICR, default: 0)
The tag of the target parameter that the digital input will control.

Status (53-56, Read Only)
The state of the digital input, open or closed.

Open Value (45-48, Read/Write, default: 0)
The value in this parameter is sent to the target parameter when the digital input is open (off).

Closed Value (49-52, Read/Write, default: 1)
The value in this parameter is sent to the target parameter when the digital input is closed (on).

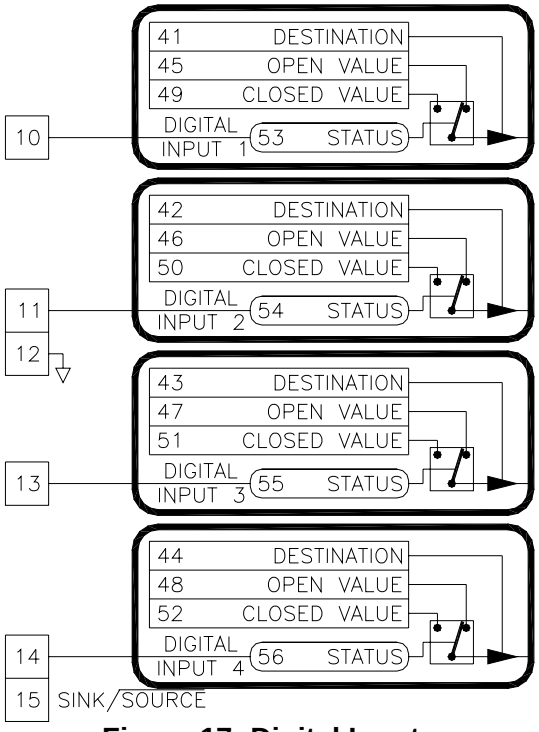

Figure 17: Digital Inputs

7.3 Frequency Input

The MicroManager has one configurable frequency input. It can be configured to write to any Read/Write parameter. Additionally, this input can simultaneously function as a pulse or revolution counter. Terminal 19 is used to select Sinking or Sourcing logic for the frequency input. Refer to D13548 on page 87 for more details.

Destination (65, ICR, default: 0)
The tag of the target parameter that the frequency input will control.

Status (66, Read Only)
The level of the input signal in Hertz.

Filtering (67, Read/Write, default: 0)
An averaging filter can be applied to the incoming signal to reduce the effects of noise. Increasing the value increases the filtering.

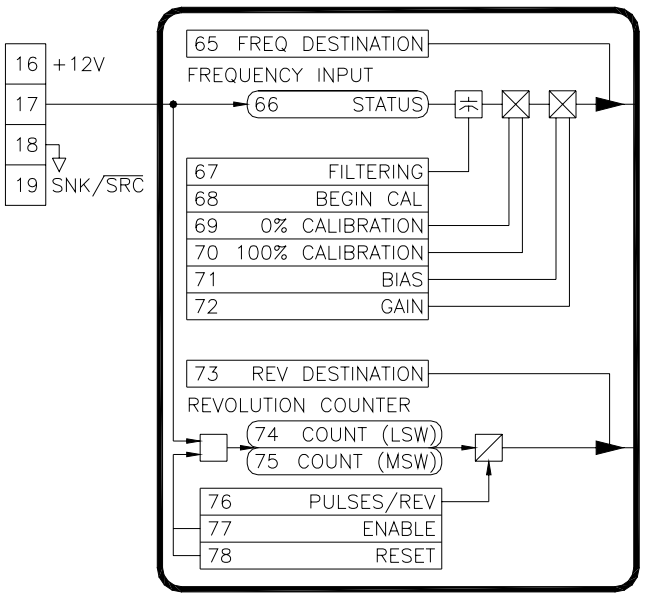

Figure 18: Frequency Input

Begin Calibration (68, ICR, default: 0)
For proper measurement, the frequency input must be calibrated to the range of the incoming signal. Calibration is performed by setting the **0% Calibration** and **100% Calibration** parameters. This can be done manually (see below) or by allowing the MicroManager to measure the levels.

Calibration is started by setting this parameter to 1. After the Enter button is pressed, the display will momentarily display LoCAL (Low Calibration). The display will then change showing the frequency value in Hertz. The minimum signal should be applied to the input. When the Enter button is pressed, the frequency value will be recorded.

The display will then momentarily display HiCal (High Calibration) and then show the frequency value. The maximum signal should be applied to the input. When the Enter button is pressed, the frequency value will be recorded.

If the low calibration value is less than the high calibration value, the low and high value will be stored in the **0% Calibration** and **100% Calibration** parameters. Otherwise, the display will show CAL Error and the calibration values will be discarded and the routine will need to be repeated.

0% Calibration (69, Read/Write, default: 0)
This calibration value defines the minimum input signal in Hertz. This value corresponds to the frequency level when the input is at its minimum level. For proper operation, the **0% Calibration** value must be less than the **100% Calibration** value.

100% Calibration (70, Read/Write, default: 50000)
This calibration value defines the maximum input signal in Hertz. This value corresponds to the frequency level when the input is at its maximum level. For proper operation, the **100% Calibration** value must be greater than the **0% Calibration** value.

Bias (71, Read/Write, default: 0.00%)
This parameter defines the value sent to the target parameter when the input signal is at or below 0%.

Gain (72, Read/Write, default: 100.00%)
This parameter defines the value sent to the target parameter when the input signal is at or above 100%.

Revolution Destination (73, ICR, default: 0)
The tag of the target parameter that the revolution counter will control.

Count (74-75, Read Only)
The value of the pulse counter. When **Count Enable** is 1, every rising edge on the input signal causes the value to increase by 1. In order to accommodate for high resolution encoders, the value is a 32 bit integer and thus has a most significant (upper) 16 bits, and a least significant (lower) 16 bits. The counter has an upper limit of 4,294,967,295.

Pulses Per Revolution (76, Read/Write, default: 1)
This parameter is divided into the **Count** value to produce a revolution count. For example, if a 1024 line encoder is connected and this parameter is set to 1024, then the target parameter will increment once for each full revolution of the encoder.

Reset (78, Read/Write, default: 0)
When this parameter is 1, it resets **Count** to zero.

7.4 HMI

The HMI block provides for diagnostic monitoring of the buttons over the communications port. A status of zero indicates the button is not pressed. A status of 1 indicates the button is pressed.

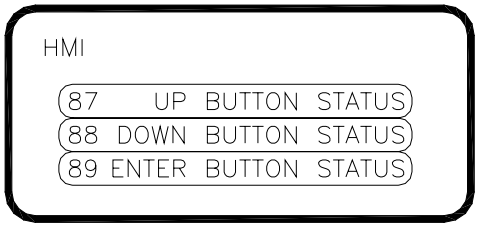

Figure 19: HMI

7.5 Communications

The MicroManager is equipped with a Modbus® RTU RS485 slave port. The port can operate in 2 or 4 wire mode. Refer to D13307 on page 103 for connection information. Refer to Modbus® Overview on page 74 for more details on the Modbus® protocol.

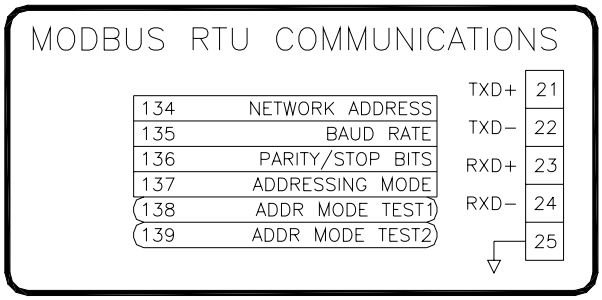

Figure 20: Communications

Network Address (134, Read/Write, default: 1)
The address of the MicroManager on the Modbus® network. Each device on the bus must have a unique network address.

Baud Rate (135, Read/Write, default: 4)
Sets the transmit and receive rate of data over the serial port.

Setting	Baud
0	2400
1	4800
2	9600
3	19200
4	**38400**

Table 4: Baud Rate Settings

Parity/Stop Bits (136, Read/Write, default: 1)
Sets the parity and number of stop bits for the serial port.

Setting	Parity, Stop Bits
0	None,1
1	**None,2**
2	Even,1
3	Odd,1

Table 5: Parity Stop Bits Settings

Addressing Mode (137, Read/Write, default: 1)
In the Modbus® specification, registers are addressed using an offset. For example, to read register 1, an address of 0 must be used. Much of the available Modbus® master communications equipment (PLC's and touchscreens) take this offset into account. Therefore, to read register 1, an address of 1 is used when programming. The master device will decrement the address before requesting it from the slave.

However, not all master devices take this offset into account. The **Addressing Mode** parameter can be used to implement either scheme and "match up" the addresses so that the actual address is used to address that register (making programming much easier).

In order to determine which mode to use with a particular master, have the master read the **Address Mode Test 2** parameter. If the returned value is 0xAAAA in hex, everything is correct. If the returned value is 0x5555 (the value of **Address Mode Test 1**), then the **Addressing Mode** parameter needs to be changed.

Addressing Mode Test 1 (138, Read Only)
Test parameter that has a fixed value of 21845 (5555 in hex) .

Addressing Mode Test 2 (139, Read Only)
Test parameter that has a fixed value of 43690 (AAAA in hex) .

7.6 Digital Outputs

The MicroManager has two configurable open collector (sinking) type digital outputs.

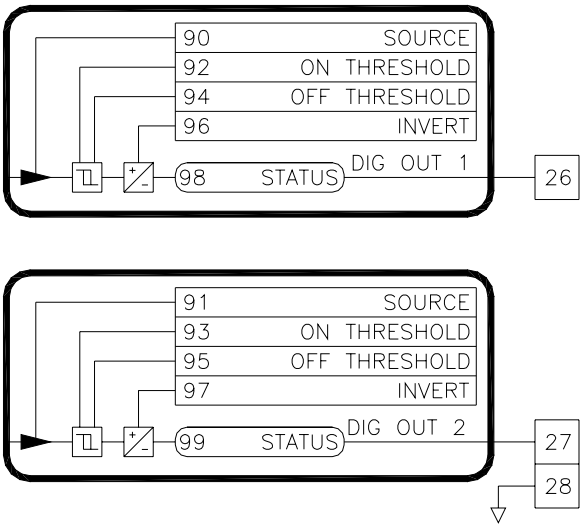

Figure 21: Digital Outputs

Source (90-91, ICR, default: 0)
The tag of the parameter that will control the digital output.

On Threshold (92-93, Read/Write, default: 0.01%)
The level that the source parameter must equal or exceed in order for the digital output to be on.

Off Threshold (94-95, Read/Write, default: 0.00%)
The level that the source parameter must be equal to or fall below in order for the digital output to be off.

Invert (96-97, Read/Write, default: 0.01%)
When this parameter is 1, the logic of the digital output is inverted.

Status (98-99, Read Only)
The state of the digital output. A zero indicates Off, and a 1 indicates On (sinking).

7.7 Analog Outputs

The MicroManager has three configurable analog outputs. Outputs 1 and 2 have 12 bit resolution and can be used as voltage and/or current outputs. Output 3 has 10 bit resolution and can only be used as a voltage output. Furthermore, output 3 must be connected to a high impedance input (>1megohm) for proper operation.

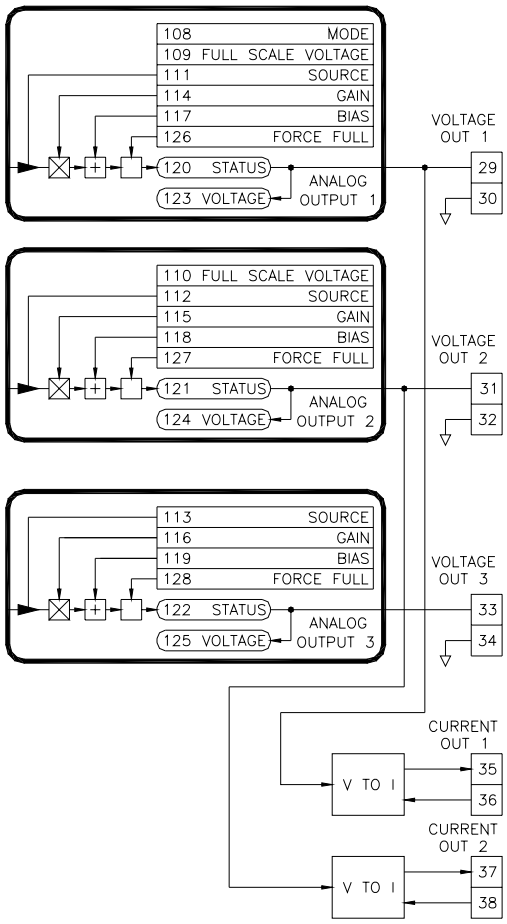

Figure 22: Analog Outputs

Mode (108, ICR, default: 0)
When Mode is 0 (unipolar), analog outputs 1 and 2 operate independently. When Mode is 1 (bipolar), both outputs are used in conjunction to provide a single bipolar output signal. Note that special wiring precautions are needed when using this mode. Terminal 29 is the positive output signal and Terminal 31 is the negative output signal. There must be no other connections between circuit common and the external device. An isolator board may be required. Refer to drawing D13548 on page 87 for an example bipolar connection. In this mode, the Source, Bias, & Gain parameters for Analog Output 2 are ignored.

Full Scale Voltage (109-110, Read/Write, default: 1)
The digital to analog converter (DAC) is capable of outputting a full scale voltage signal of 5V or 10V. By default, this parameter is set to 1 to provide a nominal 0 to +10VDC signal on the output. If only a 5VDC or lower signal is required, set this parameter to 0. This will reduce the full scale output voltage level to 5VDC while maintaining full 12 bit resolution. Further scaling of the output signal level is accomplished via the **Bias** and **Gain** parameters. Note that this setting also affects the full scale current output levels. For nominal 0 or 4 to 20mA outputs, this parameter must be set to 1.

Source (111-113, ICR, default: 0)
The tag of the parameter that will control the analog output.

Gain (114-116, Read/Write, default: 100.00%)
The maximum analog output level is controlled by the **Gain** parameter. A 10V or 20mA signal will be obtained when the **Gain** is at 100% and the value of the source parameter is also at 100.00%.

Bias (117-119, Read/Write, default: 0.00%)
The Bias parameter is used to set a minimum output voltage or current.

Status (120-122, Read Only)
The DAC bit values. Outputs 1 & 2 are 12 bits. Output 3 is 10 bit. The table below gives common readings assuming the Full Scale Voltage is set to 10V. If set to 5V, the Voltage and Current levels will be reduced by 50%.

Voltage	Current	12 Bit Status (1,2)	10 Bit Status (3)
10.0	20.0mA	4095	1023
7.5	15.0mA	3071	1021
5.0	10.0mA	2047	511
2.5	5.0mA	1024	255
0.0	0.0mA	0	0

Table 6: Analog Output Status Readings

Voltage (123-125, Read Only)
The voltage level of the analog outputs.

Force Full (126-128, Read/Write, default: 0)
When set to 1, this parameter forces the analog output to maximum output. This is typically only used during setup.

7.8 PID Loop

The MicroManager provides a PID Loop for system integration with dancer potentiometers, loadcells, etc…

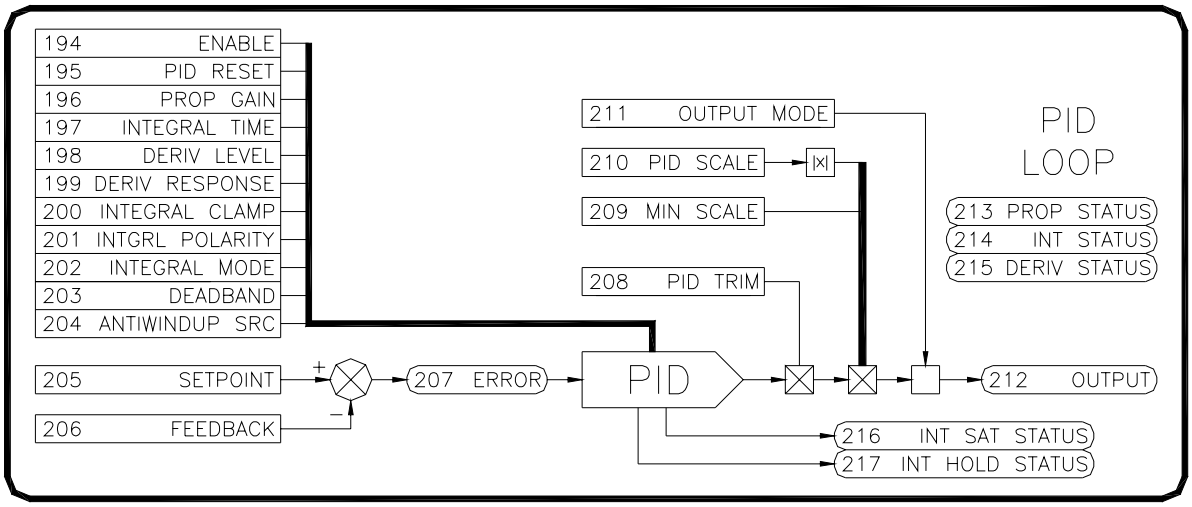

Figure 23: PID Loop Blocks

Enable (194, Read/Write, default: 0)
When this parameter has a value of 0, the **Proportional Status**, **Integral Status**, **Derivative Status**, and the **PID Output** are all reset to zero.

PID Reset (195, Read/Write, default: 0)
When this parameter has a value of 1, the **Proportional Status**, **Integral Status**, **Derivative Status**, and the **PID Output** are all reset to zero.

Proportional Gain (196, Read/Write, default: 5.00)
The **Proportional Gain** scales the output based upon the **Error**. Increasing the gain improves the loop response but can also increase overshoot.

Integral Time (197, Read/Write, default: 10.000s)
The **Integral Time** adjustment eliminates steady-state error. Decreasing the integral time improves loop response. However, setting it too low can cause oscillation. The adjustment is in seconds and corresponds to the amount of time that the **PID Output** signal would take to integrate from 0.00% to 100%.

Derivative Level (198, Read/Write, default: 0.00%)
With derivative action, the controller output is proportional to the rate of change of the error. The **Derivative Level** adjustment is used to scale the derivative portion of the final PID Output. Setting this to 0 disables the derivative portion.

Derivative Response (199, Read/Write, default: 3.24ms)
With derivative action, the controller output is proportional to the rate of change of the error. The **Derivative Response** output is based upon the predicted **Error** by analyzing the previous error levels. This parameter determines the interval that the error levels are sampled. Thus, this parameter is a time adjustment in milliseconds. Higher values increase the time between samples.

Integral Clamp (200, Read/Write, default: 0)
When **Integral Clamp** is 1, the **Integral Status** is clamped to zero, yielding proportional and derivative control only.

Integral Polarity (201, Read/Write, default: 1)
A value of 0 sets the integral portion for unipolar (positive only) mode. A value of 1 sets the integral portion for bipolar (positive and negative) mode.

Integral Mode (202, Read/Write, default: 0)
The Integral portion has two modes of operation. A setting of 0 selects the Linear mode of operation, and the rate of change of the integral value is not dependent on the amount of error. This mode is useful and typically more stable in dancer/loadcell systems. A setting of 1 selects the Standard mode of operation, and the rate of change of the integral is dependent on the amount of error (the greater the error, the faster the integration).

Deadband (203, Read/Write, default: 0.00%)
The **Deadband** adjustment is used to provide a window of tolerance in the error signal that the integral circuit will ignore. This is commonly used to ignore small dancer movements.

Antiwindup Source (204, Read/Write, default: 0)
Integral windup refers to a situation in PID controllers where the integral portion continues to integrate (either up or down) and the output has saturated. Thus, changes in the integral signal are not reflected on the controller output. This parameter is designed to prevent the integral from winding up in the negative direction by sensing when the output has saturated and the integral is decreasing.

When this occurs, this function prevents the integral from decreasing. This mode is indicated by **Integral Hold Status** having a value of 1. The value of this parameter determines which parameter to monitor. Typically, when used, this value would be set to one of the Analog Output Status parameters (120-122). This is an optional parameter. This function is disabled when set to 0.

Setpoint (205, Read/Write, default: 0.00%)
This is the desired operating value of the controlled system. In dancer systems, this is the desired position that the dancer should operate. In loadcell systems, this is the desired tension.

Feedback (206, Read/Write, default: 0.00%)
This is the actual operating value of the controlled system. In dancer systems, this is the actual position of the dancer. In loadcell systems, this is the actual material tension. Typically, an analog input is linked to this parameter and thus controls its value.

Error (207, Read-Only)
The **Feedback** is subtracted from the **Setpoint** to produce the **Error**.

PID Trim (208, Read/Write, default: 100.00%)
The **PID Trim** adjustment controls the amount of correction that the **PID Output** can provide. In many systems, the PID only needs to provide a small amount of correction as other signals (line speed, diameter) provide the major portion of the output signal. In these cases, a general setting of 10-20% is a good starting point. This parameter can also be used to invert the action of the loop by inverting the sign.

PID Min Scale (209, Read/Write, default: 0.00%)
The **Min Scale** adjustment provides for a minimum level of scaling even when the **PID Scale** parameter is at zero.

PID Scale (210, Read/Write, default: 100.00%)
The **PID Scale** in concert with **PID Min Scale** provides a method for an external signal to scale the **PID Output**. This signal is typically a line speed signal from an analog or frequency input. This can give dancer or loadcell systems consistent control sensitivity over variations in line speed.

PID Output Mode (211, Read/Write, default: 0)
A setting of 0 allows for bipolar output. A setting of 1 allows for positive only output (i.e., when negative values are produced by the loop, the output is clamped at zero). A setting of 2 allows for negative only output (i.e., when positive values are produced by the loop, the output is clamped at zero).

PID Output (212, Read-Only)
The output of the PID loop after being modified by the **PID Trim, PID Min Scale, PID Scale,** and **PID Output Mode** parameters.

Proportional Status (213, Read-Only)
The individual proportional component of the **PID Output**. This parameter is provided

for aid in setup and tuning.

Integral Status (214, Read-Only)
The individual integral component of the **PID Output**. This parameter is provided for aid in setup and tuning.

Derivative Status (215, Read-Only)
The individual integral component of the **PID Output**. This parameter is provided for aid in setup and tuning.

Integral Saturation Status (216, Read-Only)
When the Integral signal saturates at ±100.00%, the **Integral Saturation Status** parameter becomes True. Typically, this indicates that the **PID Trim** parameter may need to be increased. This parameter is provided for aid in setup and tuning.

Integral Hold Status (217, Read-Only)
This indicates when the integral is placed on hold due to the Anti-Integral Windup function. Refer to **Antiwindup Source** above.

7.9 Roll Speed Calculator

A problem encountered in center driven velocity takeup and letoff applications is the nonlinear relationship between the diameter of a roll and the motor speed required to maintain constant surface speed of the roll during diameter increase or decrease. A plot of this relationship shows a hyperbolic curve.

When the line speed and roll diameter values are known, the required center driven roll speed can be calculated. The rate of material take-up or pay-out from a center driven winder or unwinder would be held constant during roll diameter changes. The line speed signal typically comes from a tachometer or encoder on the line drive. The diameter information can be obtained through a number of different methods (See Diameter Select in Diameter Calculator).

The scaled line speed is divided by the scaled diameter signal to generate the center drive speed reference. Depending on required system response, a dancer or other device may be required for limited transient compensation between the center winder/unwinder and other driven parts of a line.

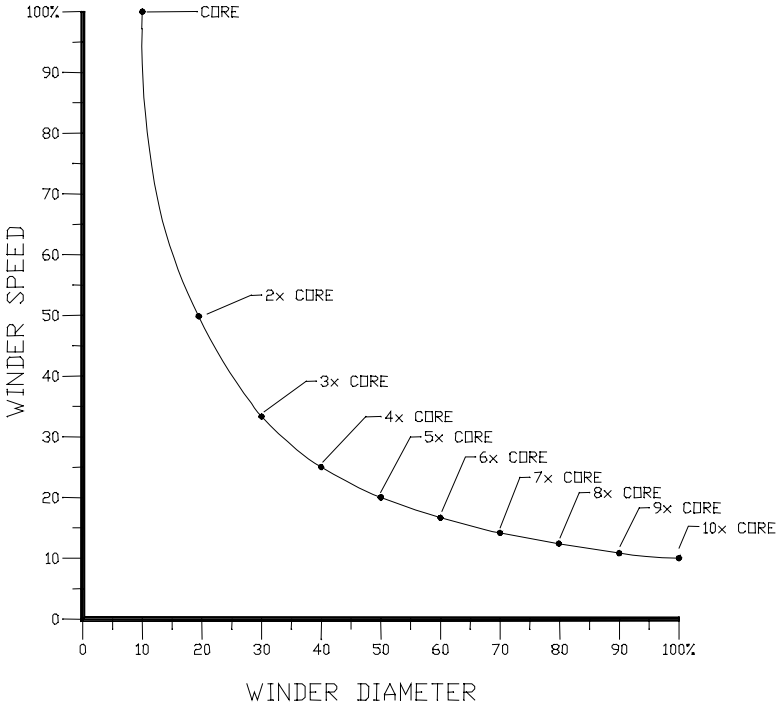

Figure 24: Winder Speed Vs Diameter

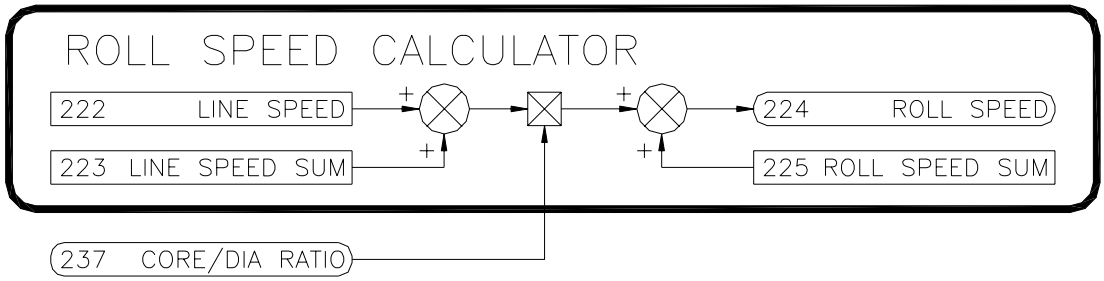

Figure 25: Roll Speed Calculator

Line Speed (222, Read/Write, default: 0.00%)
This signal is used along with the Core/Diameter Ratio to calculate the takeup or letoff **Roll Speed**.

Line Speed Sum (223, Read/Write, default: 0.00%)
This parameter provides a place to sum a signal with the **Line Speed** before it is multiplied by the **Core/Diameter Ratio**. A typical use would be to sum in the output of the PID block.

Roll Speed (224, Read-Only)
The calculated takeup or letoff roll speed.

Roll Speed Sum (225, Read/Write, default: 0.00%)
This parameter provides a place to sum a signal after the **Line Speed** has been multiplied by the **Core/Diameter Ratio**. A typical use would be to sum in the output of the PID block.

7.10 Diameter Calculator

Diameter compensation is essential for stable and accurate tension control of winders and unwinders. The diameter calculator provides a number of methods of calculating the diameter.

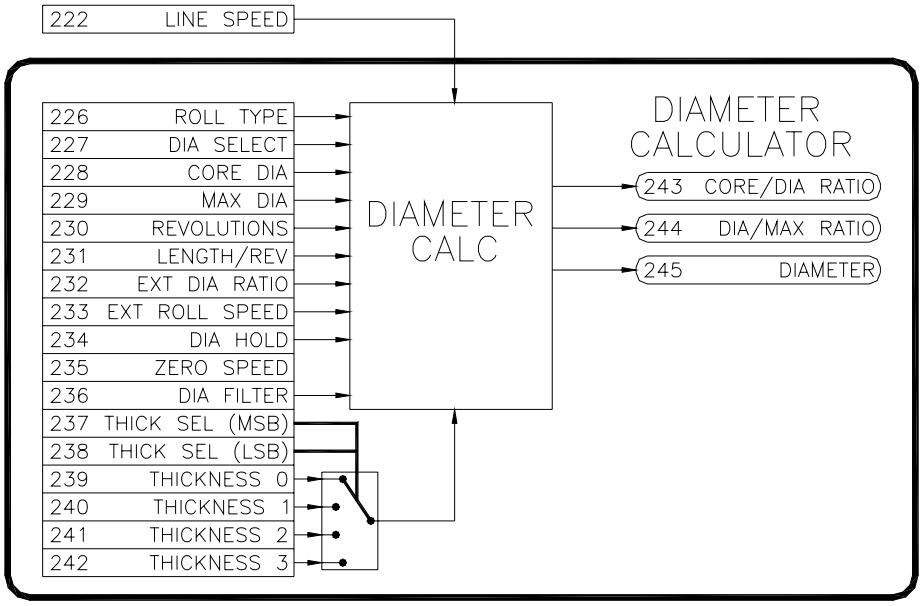

Figure 26: Diameter Calculator

Roll Type (226, Read/Write, default: 0)
Set to zero for winders, and one for unwinders. This parameter is needed by the Diameter Calculator only when **Diameter Select** is set for *2 (Roll Revolutions)* or *3 (Line Revolutions)*.

Diameter Select (227, Read/Write, default: 0)
Determines which method is used to calculate the diameter.

0=None
The diameter calculator is disabled, and the **Diameter** is equal to the **Core Diameter**.

1=External Diameter
An external diameter signal is provided to the calculator. This signal could come from an ultrasonic measuring unit, laser sensor, or from a mechanical measuring device such as a rider arm and pot.

2=Roll Revolutions
The diameter is calculated by the material thickness and the number of revolutions of the takeup or letoff roll. The revolution count can be easily obtained from a pulse type encoder mounted on the takeup or letoff drive or roll.

3=Line Revolutions
The diameter is calculated by the number of line speed revolutions, length per revolution, and material thickness. The revolution count can be easily obtained from a pulse type encoder mounted on the line drive.

4=*Line Speed & Roll Speed*
The diameter is calculated by dividing the Line Speed signal by the Roll Speed signal.

Core Diameter (228, Read/Write, default: 1.00 unit)
The diameter of an empty core. If multiple size cores are used, enter the smallest diameter. The only exception is when Diameter Select is equal to two or three. In these cases, enter the average of the cores that will be used. Any unit of measurement (inches, millimeters, etc…) can be used.

Maximum Diameter (229, Read/Write, default 10.00 units)
The maximum roll diameter. If multiple size max diameter rolls are used, enter the largest diameter. The only exception is when Diameter Select is equal to two or three. In these cases, enter the average value of the maximum diameter. Unit of measurement must be the same as the **Core Diameter**.

Revolutions (230, Read/Write, default: 0)
The number of revolutions of the takeup/letoff roll or the line speed roll. This value is used to calculate the diameter when **Diameter Select** is set for *2 (Roll Revolutions)* or *3 (Line Revolutions)*. Typically, the Revolution Counter on the Frequency Input is linked to this parameter when it is used.

Length Per Revolution (231, Read/Write, default: 0.001 units)
The length of material per one revolution of the Line Speed pulse counter. Used to calculate the diameter when **Diameter Select** is set to *3 (Line Revolutions).* The unit of measurement must be the same as that used in the **Core Diameter**. Typically, when used, this would be set to the circumference of the line speed roller in contact with the material.

External Diameter Ratio (232, Read/Write, default: 0.00%)
A ratio that is proportional to the diameter of the takeup or letoff roll. Used to calculate the diameter when **Diameter Select** is set to *1 (External).* Typically, an external analog input is linked to this parameter to provide the diameter information. The signal should be scaled via the Gain and Bias of the analog input so that this value reads 0.00% at **Core Diameter** and 100.00% at **Maximum Diameter**.

External Roll Speed (233, Read/Write, default: 0.00%)
This signal is used along with **Line Speed** to calculate **Diameter** when **Diameter Select** is set to 4 *(Line Speed & Roll Speed).* Typically, an analog or frequency input is linked to this parameter to provide the calculator with the winder or unwinder speed.

Diameter Hold (234, Read/Write, default: 0)
When **Diameter Select** is set to *4 (Line Speed & Roll Speed)*, this parameter can be used to hold or pause the diameter calculation. This would need to be used only if the line will be stopped before completely winding or unwinding a full roll AND it is necessary to maintain tension on the material while stopped. Since the diameter is calculated from the Line and Roll speed signals (and these signals will go to zero when the process is stopped), the calculated diameter will fall to the **Core Diameter** setting. This in turn will cause the tension on the material to decrease. When the process is restarted, the Line and Roll speed signals are again present, and the diameter calculation will return to normal. For many applications, this decrease in tension while stopped is acceptable. However, for processes that require the tension to be maintained while stopped, external logic will be required to control the **Diameter Hold** parameter (typically linked from a digital input).

Initially, **Diameter Hold** should be zero when a new roll is started. Before the process is stopped, **Diameter Hold** should be set to one (pausing the diameter calculation). When the process is restarted, **Diameter Hold** should be set back to zero (allowing the calculation to be performed).

Zero Speed (235, Read/Write, default: 2.00%)
When Diameter Select = 4 (Line Speed and Roll Speed), and the Line Speed falls below this level, the diameter calculation is suspended and the **Diameter** is set to **Core Diameter**.

Diameter Filter (236, Read/Write, default: 0)
An averaging filter can be applied to Diameter calculation. Increasing the value increases the filtering.

Thickness Select (237-238, Read Write, default: 0)

In the cases where the thickness of the material is used to calculate the diameter (**Diameter Select** equals *2 (Roll Revolutions)* or *3 (Line Revolutions)*), the diameter calculator provides four thickness settings to accommodate different materials. Each of these four settings can be selected by the **Thickness Select** parameters. Typically, Digital Inputs 3 and 4 are setup to control the **Thickness Select** parameters so external contacts can be used to select the desired Thickness.

Thickness Select MSB	Thickness Select LSB	Thickness Used
0	**0**	**P239: Thickness 0**
0	1	P240: Thickness 1
1	0	P241: Thickness 2
1	1	P242: Thickness 3

Table 7: Thickness Selections

Thickness 0-3 (239-242, Read Write, default: 0.000 units)
These parameters allow four material thickness presets to be defined. The actual thickness used by the calculator is determined by the **Thickness Select** parameters. The unit of measurement should be the same as that of the **Core Diameter**.

Core/Diameter Ratio (243, Read Only)
The ratio obtained by dividing the **Core Diameter** by the calculated **Diameter**. This value is used along with **Line Speed** to calculate the **Roll Speed**.

Diameter/Max Ratio (244, Read Only)
The ratio obtained by dividing the calculated **Diameter** by the **Max Diameter**.

Diameter (245, Read Only)
The calculated diameter. Unit of measurement is the same as the **Core Diameter**.

7.11 Tension Calculator

The tension calculator is used to provide a tapered **Tension Demand** signal. In some cases, decreasing tension (taper tension) is desirable to prevent telescoping and/or wrinkling of inner layers of material. The tension calculator can be configured to provide taper tension starting at any point in the roll. **Tension Demand** will decrease by a percentage of the **Tension Setpoint** from the **Taper Diameter** setting to the **Max Diameter**.

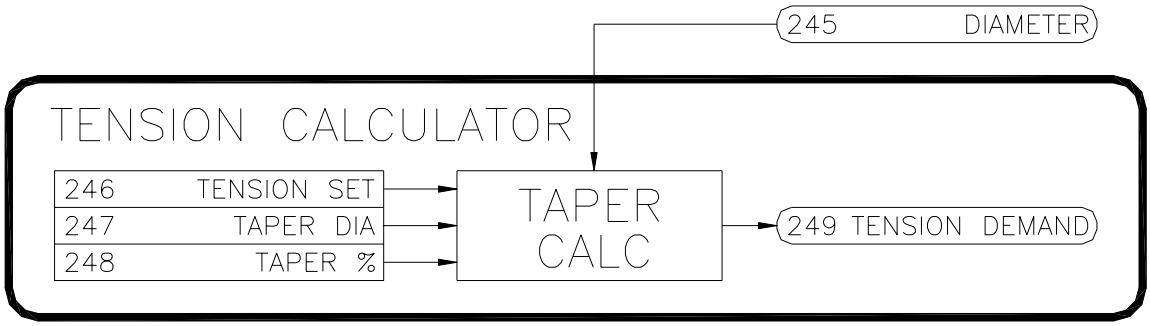

Figure 27: Tension Calculator

Tension Setpoint (246, Read/Write, default: 0.00%)
The desired tension setpoint when the torque mode is used. Typically, a potentiometer connected to one of the analog inputs is used to adjust this value.

Taper Diameter (247, Read/Write, default: 0.00%)
The diameter level at which tapering begins. Unit of measurement is the same as the **Core Diameter**.

Taper Percentage (248, Read/Write, default: 0.00%)
The desired percentage of the **Tension Setpoint** that the **Tension Demand** signal will be tapered when **Diameter** is at **Max Diameter**. Refer to Figure 28. In this example, the **Tension Setpoint**=50.00% and the **Taper Percentage**=20.00%. Thus, at **Max Diameter**, the **Tension Demand** signal has decreased by 10.00% (20.00% of the **Tension Setpoint**).

Tension Demand (249, Read Only)
The tapered tension demand output. **Tension Demand** will be equal to **Tension Setpoint** as the **Diameter** increases from Core Diameter up to the Taper Diameter point. As **Diameter** increases, **Tension Demand** is decreased at a rate controlled by the **Taper Percentage**.

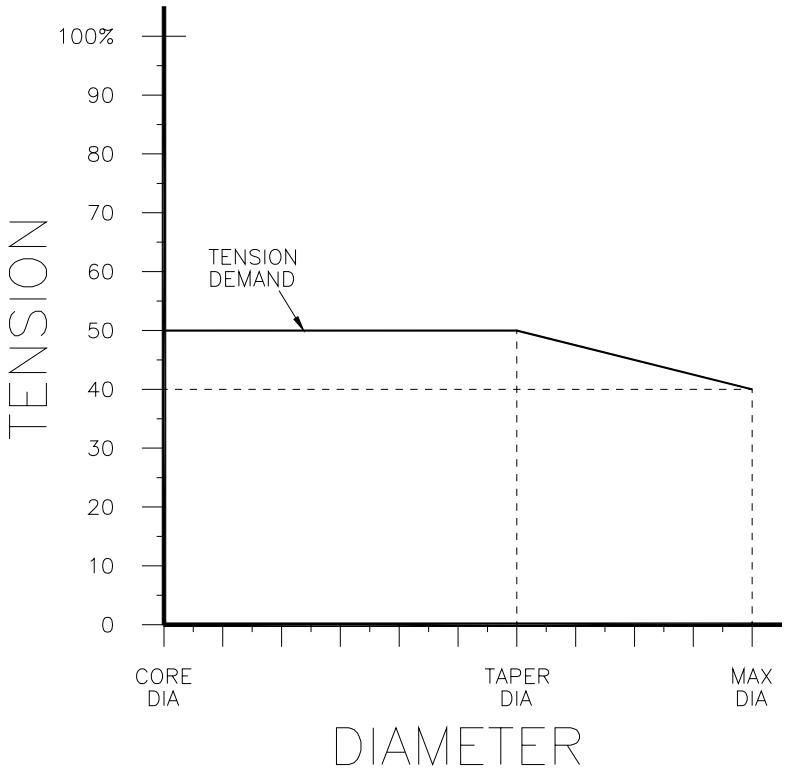

Figure 28: Taper Tension Example

7.12 CTCW Calculator

The CTCW block allows the MicroManager to provide constant or taper tension control without external tension sensors. The CTCW block provides a torque reference output that is composed of diameter torque, inertia torque, friction torque, bias torque, and pulse torque. Diameter torque is supplied to compensate for the increase in roll diameter. Inertia torque is supplied when the line is accelerating. Friction torque must also be supplied to overcome the mechanics in the drive train. A momentary pulse of torque (pulse torque) can be supplied to help 'break away' the mechanics of the system.

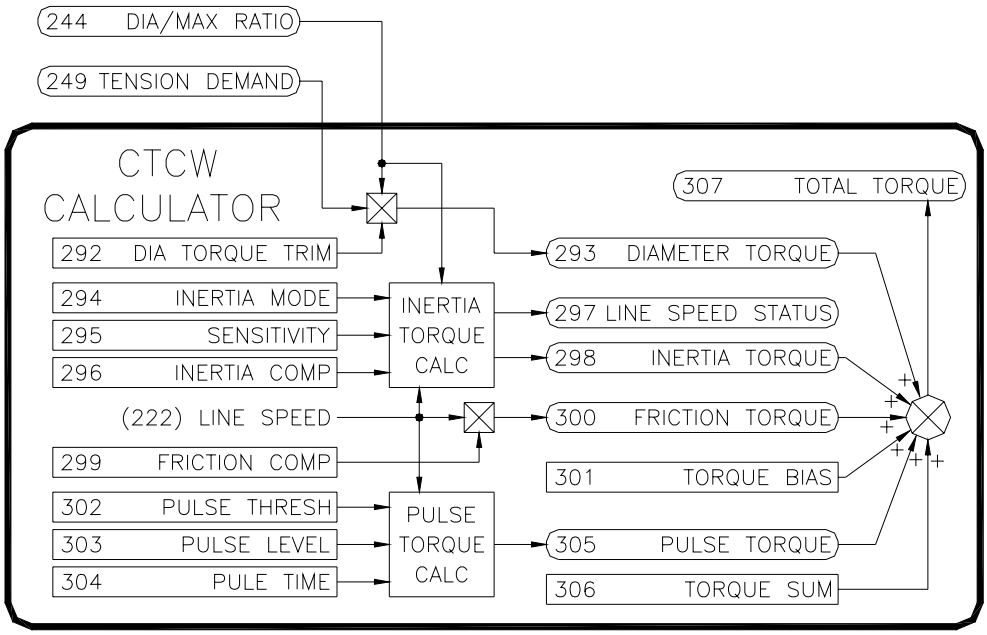

Figure 29: Logic Gate Blocks

Diameter Torque (292, Read/Write, default: 100.00%)
This parameter provides a trim adjustment for the **Diameter Torque**. Typically, the maximum amount of torque that the motor (and gearing) can provide is greater than the actual amount of torque required to provide the desired tension level at the maximum diameter. This trim adjustment provides a means to scale down the **Diameter Torque** level so that a **Tension Demand** level of 100% provides only the required torque level to achieve 100% tension.

Diameter Torque (293, Read-Only)
In order to provide constant tension, the winder torque must increase proportionally with the increase in diameter.

Inertia Mode (294, Read/Write, default: 0=Accel)
Controls the type of inertia compensating torque supplied. Typically, winders (takeups) need accelerating compensation and unwinders (letoffs) need decelerating compensation. 0=Accel, 1=Decel.

Inertia Sensitivity (295, Read/Write, default: 1)
The Inertia Torque calculator monitors the Line Speed parameter to provide an

Inertia Torque output level. This level depends upon how fast the line speed is changing. This derivative calculation is made by examining the Line Speed at a set interval and determining the amount of change. This parameter adjusts the amount of time between samples. With fast line acceleration/deceleration rates of a few seconds, the sampling time can be set at 1 or 2. With slower rates, the time between samples typically would need to be increased. Refer to the following table for recommended initial values depending upon the line accel/decel rates. Note that these values may need to be adjusted to obtain steady levels of **Inertia Torque** depending upon the amount of electrical noise present on the signal.

Line Accel/Decel Times (secs)	Typical Inertia Sensitivity Values
1-3	1
4-7	2
8-11	3
12-13	4
14-20	5
21-26	6
27 or higher	7

Table 8: Typical Inertia Sensitivity Values

Inertia Compensation (296, Read/Write, default: 0.00%)
Additional torque is required by the winder drive when the line speed is accelerating. This parameter is used in conjunction with **Line Speed** to control the amount of additional **Inertia Torque**.

Line Speed Status (297, Read Only)
Indicates whether Line Speed is decelerating, steady, or accelerating.

Value	Line Speed is:
0	Decelerating
1	Steady
2	Accelerating

Table 9: Line Speed Status Values

Inertia Torque (298, Read-Only)
The amount of additional torque reference supplied when the line is accelerating.

Friction Compensation (299, Read/Write, default: 0.00%)
Torque is required to overcome the dynamic friction in the mechanics of the drive train. Friction loading typically increases with speed. The amount of **Friction Torque** is controlled by **Friction Compensation** and **Line Speed**.

Friction Torque (300, Read-Only)
The amount of torque reference supplied to compensate for frictional loading.

Torque Bias (301, Read-Only)
Torque is required to overcome the static friction in the mechanics of the drive train. This parameter sums with all the other torque signals to produce the **Total Torque** signal.

Pulse Threshold (302, Read/Write, default: 1.00%)
The level that the **Line Speed** signal must exceed before the **Pulse Torque Level** is applied to **Pulse Torque**. After the pulse torque has been applied, the **Line Speed** signal must return to 0.00% and again exceed the threshold for pulse torque to be re-applied.

Pulse Torque Level (303, Read/Write, default: 0.00%)
When the mechanics of a system are oversized for the desired level of tension, the friction of the system while stopped many need to be overcome with additional starting torque. This additional torque is only needed momentarily to 'break away' the mechanics of the system. This parameters sets the level of torque to be momentarily applied.

Pulse Torque Time (304, Read/Write, default: 0.1 Secs)
The amount of time that the pulse torque signal is applied.

Pulse Torque (305, Read-Only)
When the **Line Speed** exceeds the **Pulse Torque Threshold**, the **Pulse Torque** signal will be equal to the **Pulse Torque Level** signal for the amount of time specified by **Pulse Torque Time**. After the time has expired, **Pulse Torque** will reset to zero.

Torque Sum (306, Read/Write, default: 0.00%)
This parameter provides an auxiliary summing point before the **Total Torque** is calculated. A typical use would be to sum in a correction signal from the output of a PID block when loadcells are used with the CTCW Calculator.

Total Torque (307, Read-Only)
The sum of the **Inertia Torque**, **Friction Torque**, **Torque Bias**, **Pulse Torque**, **Diameter Torque,** and **Torque Sum** parameters. The **Friction Torque, Torque Bias, Diameter Torque,** and **Torque Sum** levels are first summed and limited to 100%. The **Inertia Torque** & **Pulse Torque** are then summed and the total is limited to 150%. This parameter is typically output through an analog output to a motor drive configured as a torque regulator.

7.13 Logic Gates

The 4 Logic Gate blocks provide logic and comparison functions.

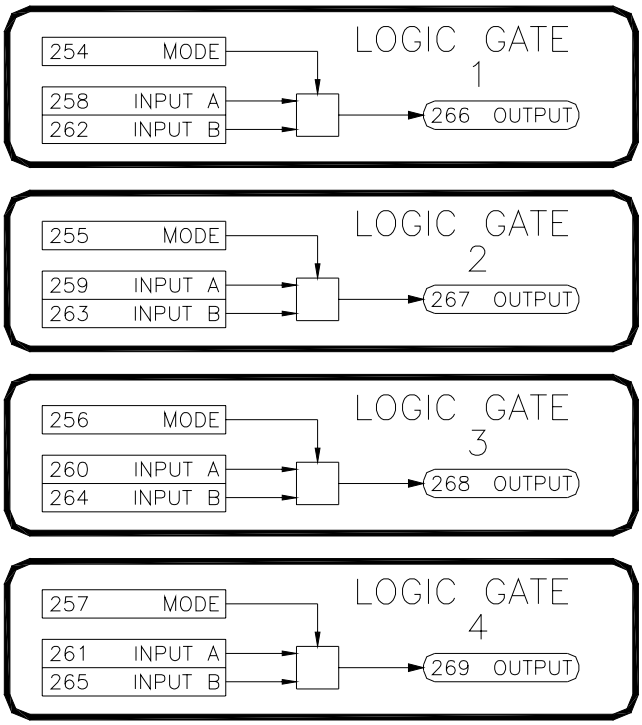

Figure 30: Logic Gate Blocks

Mode (254-257, Read/Write, default: 0)
Determines the function of the gate.

0=Off Switch
Output is equal to **Input B**.

1=On Switch
Output is equal to **Input A**.

2=And
Output is 1 if both **Input A** and **Input B** are 1. Otherwise, **Output** is False.

3=Nand
Inverted output of And.

4=Or
Output is 1 if either **Input A** or **Input B** is 1. Otherwise, **Output** is 0.

5=Nor
Inverted output of Or.

6=Exclusive Or (Xor)
Output is 1 if either **Input A** or **Input B** is 1, but not both.

7=Exclusive Nor (Xnor)
Inverted output of Exclusive Or.

8=Not
Output is 1 if **Input A** is 0. **Output** is 0 if **Input A** is 1.

9=Greater Than
Output is 1 if **Input A** > **Input B**. Otherwise Output is 0.

10=Greater Than or Equal
Output is 1 if **Input A** >= **Input B**. Otherwise Output is 0.

11=Less Than
Output is 1 if **Input A** < **Input B**. Otherwise Output is 0.

12=Less Than or Equal
Output is 1 if **Input A** <= **Input B**. Otherwise Output is 0.

13=Equal
Output is 1 if **Input A** equals **Input B**. Otherwise Output is 0.

14=Not Equal
Output is 1 if **Input A** and **Input B** are not equal. Otherwise Output is 0.

15=Absolute Value
Output is equal to the absolute value of **Input A**.

16=Negative Absolute Value

Output is equal to the negative absolute value of **Input A**.

17=Invert

Output is equal to **Input A** with opposite polarity.

18=Sum

Output is equal to **Input A** + **Input B.**

19=Difference

Output is equal to **Input A - Input B.**

20=Ratio

Output is equal to **Input A** ratioed by **Input B.**

21=Filter

Output is equal to the filtered (averaged) value of **Input A. Input B** ranges from 0 to 15 and controls the filter gain. The higher the gain, the more filtering that is applied.

22=Set-Reset

Input A functions as the Set and **Input B** functions as the Reset. Refer to Table 10 for Output states.

Set (Input A)	Reset (Input B)	Output
0	0	No Change
0	1	0
1	0	1
1	1	0

Table 10: Set Reset Truth Table

23=Positive Edge Latch

The value in **Input A** is latched into **Output** when **Input B** transitions from False to True.

24=Negative Edge Latch

The value in **Input A** is latched into **Output** when **Input B** transitions from True to False.

25=On Delay Timer †

When Input A becomes True, the Output switches to True after a delay set by Input B. Output switches back to False when Input A becomes False.

26=Off Delay Timer †

When Input A becomes False, the Output switches to False after a delay set by Input B. Output switches back to True when Input A becomes True.

27=One Shot †

When Input A becomes True, the Output immediately switches from False to True. After a delay set by Input B, the Output switches back to False. The gate ignores any successive state changes on Input A (i.e. cannot be retriggered).

28=Retriggerable One Shot †

Performs the same as the One Shot described above, except that successive

state changes on Input A reset (retrigger) the delay.

29=One Shot And †

Performs the same as the One Shot described above, except that the final Output is a One Shot gate ANDed with Input A. Thus, the Output can be reset before the Input B time has expired by Input A transitioning to False.

30=Repeat Cycle †

In this mode, the Output continually cycles between True and False when Input A is True. Input B sets the time in seconds.

Input A (258-261, Read/Write, default: 0)

First input to the logic gate.

Input B (262-265, Read/Write, default: 0)

Second input to the logic gate.

Output (266-269, Read/Write, default: 0)

Output of the logic gate. Value is determined by **Mode**, **Input A**, and **Input B**.

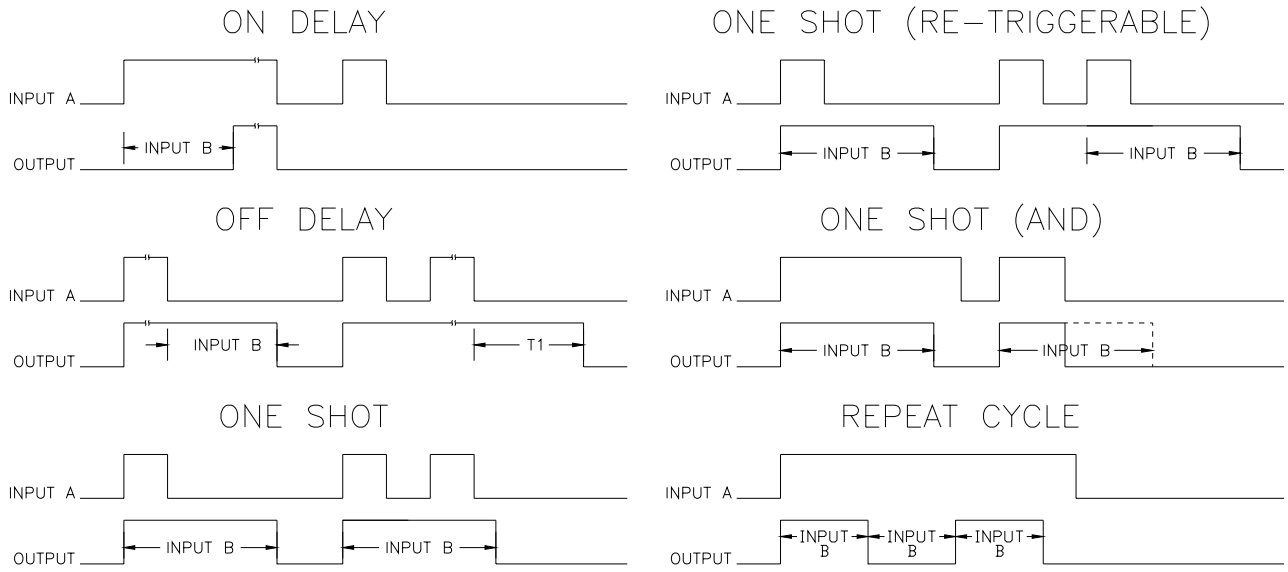

Figure 31: Logic Gate Timer Functions

†The typical operating range of Input B in Timer modes 25-30 is 0.1 to 400.0 seconds. Setting Input B for 0.0 seconds in modes 25 & 26 produces a delay of approx. 7 to 12ms. Setting Input B for 0.0 seconds in mode 30 produces an output pulse train with a period of 30ms. Setting Input B to 0.0 seconds in the remaining timer modes effectively disables the timing function.

7.14 Reference Select Blocks

The Reference Select blocks select between multiple references.

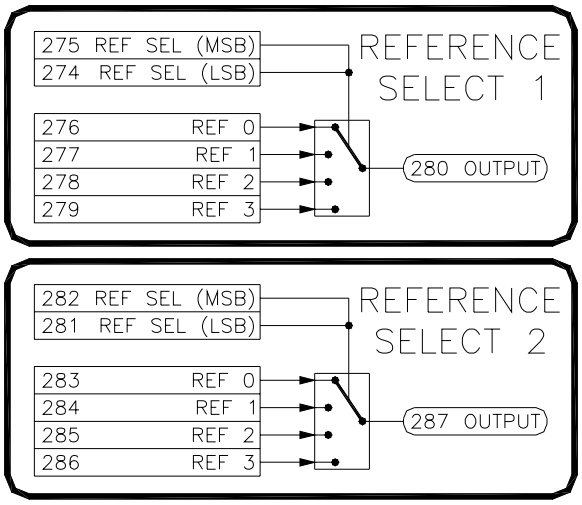

Figure 32: Reference Selects Blocks

Reference n (276-279,283-286, Read/Write, default: 0.00%)
References 0 through 3 are four independently adjustable references that can be selected by the **Reference Select** parameters.

Reference Select (274-275,281-282, Read/Write, default: 0)
The **Reference Select** parameters select between the four internal references and passes the value to the **Reference Select Output**. The parameter is divided into to parts, a Most Significant Bit and a Least Significant Bit to allow all four references to be selected easily by two digital inputs if desired.

MSB	LSB	Reference
0	0	Ref 0
0	1	Ref 1
1	0	Ref 2
1	1	Ref 3

Table 11: Reference Selection

Reference Select Output (280, 287, Read-Only)
The **Reference Select Output** parameter will have the same value as one of the four references, depending upon which reference is selected by the **Reference Select** parameters.

7.15 Internal Links

The internal links can be used to connect or link parameters together. The MicroManager provides 20 links for custom configuration. Each link has a source and a destination.

> **Note:** When two parameters with different numbers of decimal places are linked together the following occurs: The source parameter value is reformatted into an integer without any decimal places. The number of decimal places of the destination parameter is then applied to the resulting integer. For example, if a source parameter has a value of 12.34% (2 decimals) and it is linked to thickness parameter (3 decimals), 12.34% is converted to an integer value of 1234, and then reformatted with 3 decimal places, 1.234. Therefore, the destination will contain the value 123.4.

Source (ICR, default: 0)
The tag of the source parameter.

Destination (ICR, default: 0)
The tag of the destination parameter.

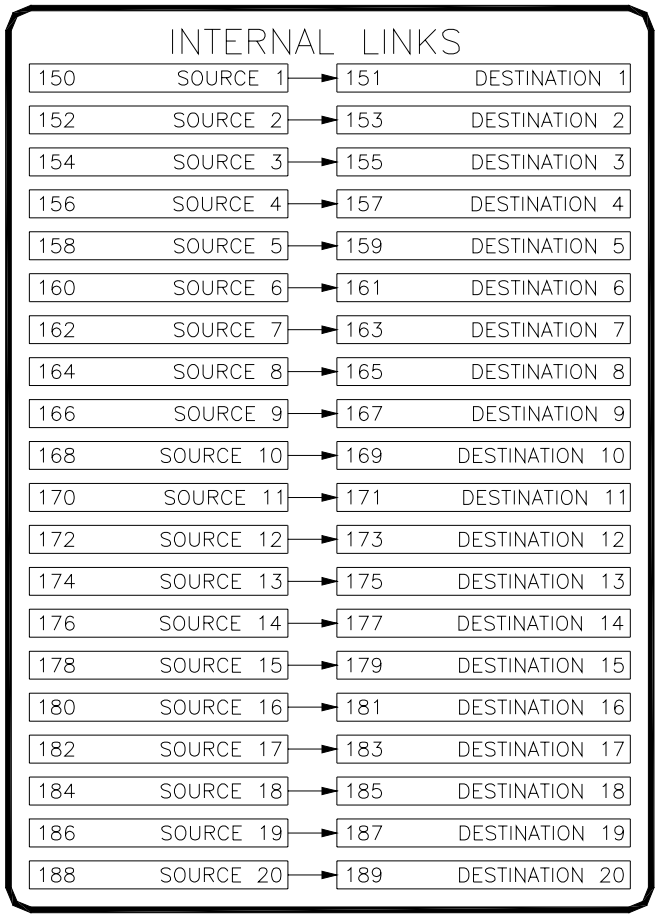

Figure 33: Internal Links

7.16 System Parameters

Save (1, Read/Write, default: 0)
Parameter changes take affect immediately. However, in order to make the changes permanent, the save command must be used. Setting this parameter to 1 causes all of the parameters to be written to the internal EEPROM. The Save Status parameter can be used to determine if the parameters were saved successfully.

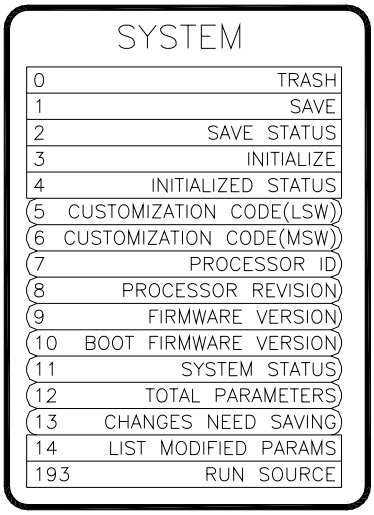

Figure 34: System Parameters

Save Status (2, Read Only)
Result of the Save command.

Save Status	Description
0	Saved Successfully
1	Saving in progress
2	Error

Table 12: Save Status Readings

Initialize (3, Read/Write, default: 0)
Used to initialize the MicroManager to one of the pre-defined control configurations. Refer to Table 1: Pre-defined Configurations on page 9 for more information. Set to 95 to re-initialize the unit to its factory preset state.

MicroManager Model (4, Read Only)
Each MicroManger model has a unique identifier. This parameter has a value of 2 on the PID models.

Customization Code (5-6, Read Only)
For engineering use only.

Processor ID (7, Read Only)
Identification code for the internal processor. For engineering use only.

Processor Revision (8, Read Only)
Hardware revision of the internal processor. For engineering use only.

Firmware Version (9, Read Only)
Version code of the internal firmware.

Boot Firmware Version (10, Read Only)
Version code of the internal boot firmware.

System Status (11, Read Only)
Status register that provides the source of the most recent reset. For engineering use only.

System Status	Description
1	Brown Out Reset
2	Power On Reset
4	Power Down Detection
8	Watchdog Timeout
16	Reset Instruction

Table 13: System Status Readings

Total Parameters (12, Read Only)
The total number of parameters.

Changes Need Saving (13, Read Only)
Status bit that indicates parameters have been changed but not saved.

List Modified Parameters (14, Read/Write, default: 0)
Setting this parameter to one allows the user to scroll through a list of all Read/Write parameters that have been modified from their default values by using the Up and Down buttons. If no parameters have been modified, the display shows **nonE.** The Enter button must be pressed to exit the list.

Run Source (149, Read/Write, default: 0)
The value of this parameter determines which parameter the MicroManager uses to determine if the unit is in the Run mode. When in the Run mode, ICR (Inhibit Change while Running) parameters cannot be changed. For example, this parameter is typically set to 53 (Digital Input 1 Status). The MicroManager is considered to be in the run mode when P53 =1 and stop when P53=0. Please note that this parameter does not affect in any way the operation or execution of any of the internal blocks.

7.17 Auxiliary Parameters

The MicroManager provides 10 auxiliary parameters for general use. One specific function of the auxiliary parameters is to serve as a tie point when linking and input directly to an output.

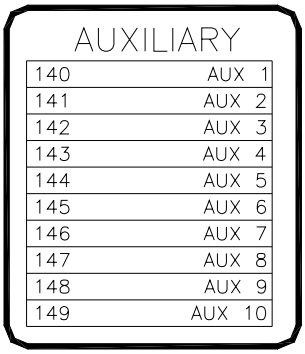

Figure 35: Auxiliary Parameters

7.18 Processing Order

The MicroManager provides great flexibility in allowing the block interconnects (links) to be reconfigured. It is therefore essential that the processor executes the blocks in a specific order to minimize the time that it takes for signals to propagate through the device. Normally, the settings in the Processing Order block are pre-configured when the unit is initialized via the P3 parameter. Changes to these settings may only be required if the MicroManager is configured manually.

The Processing Order block provides the means to control not only the order, but also which blocks do and do not execute. Each individual block in the MicroManager has a unique integer code assigned to it. This code must be entered into one of the Processing Order Block parameters in order for that block to be executed. The block whose integer code is in **PO1** is executed first. Followed by **PO2**, etc… For example, in order to have the Internal Link 7 processed first, set P292 (**PO1**) to a value of 15. If an internal block's code is not entered into one of the Execution Order's block

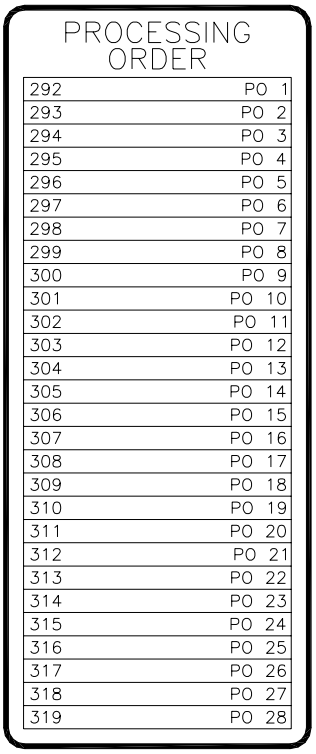

Figure 36: Processing Order Block

parameters, it will not be executed by the processor.

Block	Code	Block	Code
PID Loop 1	1	Internal Link 7	15
Application Calculators*	2	Internal Link 8	16
Logic Gate 1	3	Internal Link 9	17
Logic Gate 2	4	Internal Link 10	18
Logic Gate 3	5	Internal Link 11	19
Logic Gate 4	6	Internal Link 12	20
Reference Select 1	7	Internal Link 13	21
Reference Select 2	8	Internal Link 14	22
Internal Link 1	9	Internal Link 15	23
Internal Link 2	10	Internal Link 16	24
Internal Link 3	11	Internal Link 17	25
Internal Link 4	12	Internal Link 18	26
Internal Link 5	13	Internal Link 19	27
Internal Link 6	14	Internal Link 20	28

Table 14: Processing Order Codes

* The Application Calculators consists of the Roll Speed Calculator, Diameter Calculator, & the Tension Calculator. They are executed as a group.

7.19 Parameter Table

The following two tables lists all the MicroManager CRG parameters and their properties. Table 15 is sorted by Tag Number. ICR stands for ***I**nhibit **C**hange while **R**unning* and identifies the parameters that cannot be modified while the unit is in the Run mode. Furthermore, RO indicates ***R**ead-**O**nly* parameters.

Table 15: Parameters by Tag

Tag	Parameter Name	Min	Max	ICR	RO	Preset	User
0	Trash	0	65535			0	
1	Save	0:False	1:True			0:False	
2	Save Status	0: Save Successful 1: Saving in Progress 2: Save Error			RO	0:Save Successful	
3	Initialize	Refer to page 9		ICR		0	
4	MicroManager Model	0	65535		RO	2	
5	Customization Code (LSW)	0	65535		RO	0	
6	Customization Code (MSW)	0	65535		RO	0	
7	Processor ID	0	2047		RO	0	
8	Processor Hardware Revision	0	31		RO	0	
9	Firmware Version	0	9999		RO	-	
10	Boot Version	0	9999		RO	-	
11	System Status	0	65535		RO	0	
12	Total Parameters	0	65535		RO	-	
13	Changes Need Saving	0:False	1:True		RO	0:False	
14	List Modified Parameters	0:False	1:True			0:False	
15	Analog Input 1 Destination	0	351	ICR		0	
16	Analog Input 2 Destination	0	351	ICR		0	
17	Analog Input 1 Status	0	4092		RO	0	
18	Analog Input 2 Status	0	4092		RO	0	
19	Analog Input 1 Voltage	0.00V	12.00V		RO	0.00V	
20	Analog Input 2 Voltage	0.00V	12.00V		RO	0.00V	
21	Analog Input 1 Filtering	0	15			0	
22	Analog Input 2 Filtering	0	15			0	
23	Analog Input 1 Begin Calibration	0:False	1:True	ICR		0	
24	Analog Input 2 Begin Calibration	0:False	1:True	ICR		0	
25	Analog Input 1 0% Calibration	0	4092			0	
26	Analog Input 2 0% Calibration	0	4092			0	
27	Analog Input 1 100% Calibration	0	4092			4092	
28	Analog Input 2 100% Calibration	0	4092			4092	
29	Analog Input 1 Bias	-200.00%♦	200.00%♦			0.00%♦	
30	Analog Input 2 Bias	-200.00%♦	200.00%♦			0.00%♦	
31	Analog Input 1 Gain	-200.00%♦	200.00%♦			100.00%♦	
32	Analog Input 2 Gain	-200.00%♦	200.00%♦			100.00%♦	
33	Reserved	0	65535		RO	0	
34	Reserved	0	65535		RO	0	
35	Reserved	0	65535		RO	0	
36	Reserved	0	65535		RO	0	
37	Reserved	0	65535		RO	0	
38	Reserved	0	65535		RO	0	
39	Reserved	0	65535		RO	0	
40	Reserved	0	65535		RO	0	
41	Digital Input 1 Destination	0	351	ICR		0	
42	Digital Input 2 Destination	0	351	ICR		0	
43	Digital Input 3 Destination	0	351	ICR		0	
44	Digital Input 4 Destination	0	351	ICR		0	
45	Digital Input 1 Open Value	-200.00%♦	200.00%♦			0.00%♦	
46	Digital Input 2 Open Value	-200.00%♦	200.00%♦			0.00%♦	

Tag	Parameter Name	Min	Max	ICR	RO	Preset	User
47	Digital Input 3 Open Value	-200.00%♦	200.00%♦			0.00%♦	
48	Digital Input 4 Open Value	-200.00%♦	200.00%♦			0.00%♦	
49	Digital Input 1 Closed Value	-200.00%♦	200.00%♦			0.01%♦	
50	Digital Input 2 Closed Value	-200.00%♦	200.00%♦			0.01%♦	
51	Digital Input 3 Closed Value	-200.00%♦	200.00%♦			0.01%♦	
52	Digital Input 4 Closed Value	-200.00%♦	200.00%♦			0.01%♦	
53	Digital Input 1 Status	0:Off	1:On		RO	0:Off	
54	Digital Input 2 Status	0:Off	1:On		RO	0:Off	
55	Digital Input 3 Status	0:Off	1:On		RO	0:Off	
56	Digital Input 4 Status	0:Off	1:On		RO	0:Off	
57	Reserved	0	65535		RO	0	
58	Reserved	0	65535		RO	0	
59	Reserved	0	65535		RO	0	
60	Reserved	0	65535		RO	0	
61	Reserved	0	65535		RO	0	
62	Reserved	0	65535		RO	0	
63	Reserved	0	65535		RO	0	
64	Reserved	0	65535		RO	0	
65	Frequency Input Destination	0	351	ICR		0	
66	Frequency Input Status	0	50000Hz		RO	0Hz	
67	Frequency Input Filtering	0	15			0	
68	Frequency Input Begin Calibration	0:False	1:True	ICR		0:False	
69	Frequency Input 0% Calibration	0	50000Hz			0Hz	
70	Frequency Input 100% Calibration	0	50000Hz			50000Hz	
71	Frequency Input Bias	-200.00%♦	200.00%♦			0.00%♦	
72	Frequency Input Gain	-200.00%♦	200.00%♦			100.00%♦	
73	Revolution Count Destination	0	351	ICR		0	
74	Count (LSW)	0	65535		RO	0	
75	Count (MSW)	0	65535		RO	0	
76	Pulses Per Revolution	1	65535			1	
77	Count Enable	0:False	1:True			0:False	
78	Count Reset	0:False	1:True			0:False	
79	Reserved	0	65535		RO	0	
80	Reserved	0	65535		RO	0	
81	Reserved	0	65535		RO	0	
82	Reserved	0	65535		RO	0	
83	Reserved	0	65535		RO	0	
84	Reserved	0	65535		RO	0	
85	Reserved	0	65535		RO	0	
86	Reserved	0	65535		RO	0	
87	Up Button Status	0:Off	1:On		RO	0:Off	
88	Down Button Status	0:Off	1:On		RO	0:Off	
89	Enter Button Status	0:Off	1:On		RO	0:Off	
90	Digital Output 1 Source	0	351	ICR		0	
91	Digital Output 2 Source	0	351	ICR		0	
92	Digital Output 1 On Threshold	-200.00%♦	200.00%♦			0.01%♦	
93	Digital Output 2 On Threshold	-200.00%♦	200.00%♦			0.01%♦	
94	Digital Output 1 Off Threshold	-200.00%♦	200.00%♦			0.00%♦	
95	Digital Output 2 Off Threshold	-200.00%♦	200.00%♦			0.00%♦	
96	Digital Output 1 Invert	0:False	1:True			0:False	
97	Digital Output 2 Invert	0:False	1:True			0:False	
98	Digital Output 1 Status	0:Off	1:On		RO	0:Off	
99	Digital Output 2 Status	0:Off	1:On		RO	0:Off	
100	Reserved	0	65535		RO	0	
101	Reserved	0	65535		RO	0	

Tag	Parameter Name	Min	Max	ICR	RO	Preset	User
102	Reserved	0	65535		RO	0	
103	Reserved	0	65535		RO	0	
104	Reserved	0	65535		RO	0	
105	Reserved	0	65535		RO	0	
106	Reserved	0	65535		RO	0	
107	Reserved	0	65535		RO	0	
108	Analog Output Mode	0:Unipolar	1:Bipolar	ICR		0:Unipolar	
109	Analog Output 1 Full Scale Voltage	0:5V	1:10V			1:10V	
110	Analog Output 2 Full Scale Voltage	0:5V	1:10V			1:10V	
111	Analog Output 1 Source	0	351	ICR		0	
112	Analog Output 2 Source	0	351	ICR		0	
113	Analog Output 3 Source	0	351	ICR		0	
114	Analog Output 1 Gain	-200.00%	200.00%			100.00%	
115	Analog Output 2 Gain	-200.00%	200.00%			100.00%	
116	Analog Output 3 Gain	-200.00%	200.00%			100.00%	
117	Analog Output 1 Bias	-200.00%	100.00%			0.00%	
118	Analog Output 2 Bias	-200.00%	100.00%			0.00%	
119	Analog Output 3 Bias	-200.00%	100.00%			0.00%	
120	Analog Output 1 Status	0	4095		RO	0	
121	Analog Output 2 Status	0	4095		RO	0	
122	Analog Output 3 Status	0	4095		RO	0	
123	Analog Output 1 Voltage	0.00V	10.00V		RO	0.00V	
124	Analog Output 2 Voltage	0.00V	10.00V		RO	0.00V	
125	Analog Output 3 Voltage	0.00V	10.00V		RO	0.00V	
126	Analog Output 1 Force	0:Off	1:On			0:Off	
127	Analog Output 2 Force	0:Off	1:On			0:Off	
128	Analog Output 3 Force	0:Off	1:On			0:Off	
129	Reserved	0	65535		RO	0	
130	Reserved	0	65535		RO	0	
131	Reserved	0	65535		RO	0	
132	Reserved	0	65535		RO	0	
133	Reserved	0	65535		RO	0	
134	Network Address	1	247			1	
135	Baud Rate	0: 2400 1: 4800 2: 9600 3: 19200 4: 38400				4: 38400	
136	Parity-Stop Bits	0: No Parity, 1 Stop Bit 1: No Parity, 2 Stop Bits 2: Even Parity, 1 Stop Bit 3: Odd Parity, 1 Stop Bit				1: No Parity, 2 Stop Bits	
137	Addressing Mode	0	1			1	
138	Addressing Mode Test 1	21845	21845		RO	21845	
139	Addressing Mode Test 2	43690	43690		RO	43690	
140	Aux 1	0	65535			0	
141	Aux 2	0	65535			0	
142	Aux 3	0	65535			0	
143	Aux 4	0	65535			0	
144	Aux 5	0	65535			0	
145	Aux 6	0	65535			0	
146	Aux 7	0	65535			0	
147	Aux 8	0	65535			0	
148	Aux 9	0	65535			0	
149	Aux 10	0	65535			0	

Tag	Parameter Name	Min	Max	ICR	RO	Preset	User
150	Internal Link 1 Source	0	351	ICR		0	
151	Internal Link 1 Destination	0	351	ICR		0	
152	Internal Link 2 Source	0	351	ICR		0	
153	Internal Link 2 Destination	0	351	ICR		0	
154	Internal Link 3 Source	0	351	ICR		0	
155	Internal Link 3 Destination	0	351	ICR		0	
156	Internal Link 4 Source	0	351	ICR		0	
157	Internal Link 4 Destination	0	351	ICR		0	
158	Internal Link 5 Source	0	351	ICR		0	
159	Internal Link 5 Destination	0	351	ICR		0	
160	Internal Link 6 Source	0	351	ICR		0	
161	Internal Link 6 Destination	0	351	ICR		0	
162	Internal Link 7 Source	0	351	ICR		0	
163	Internal Link 7 Destination	0	351	ICR		0	
164	Internal Link 8 Source	0	351	ICR		0	
165	Internal Link 8 Destination	0	351	ICR		0	
166	Internal Link 9 Source	0	351	ICR		0	
167	Internal Link 9 Destination	0	351	ICR		0	
168	Internal Link 10 Source	0	351	ICR		0	
169	Internal Link 10 Destination	0	351	ICR		0	
170	Internal Link 11 Source	0	351	ICR		0	
171	Internal Link 11 Destination	0	351	ICR		0	
172	Internal Link 12 Source	0	351	ICR		0	
173	Internal Link 12 Destination	0	351	ICR		0	
174	Internal Link 13 Source	0	351	ICR		0	
175	Internal Link 13 Destination	0	351	ICR		0	
176	Internal Link 14 Source	0	351	ICR		0	
177	Internal Link 14 Destination	0	351	ICR		0	
178	Internal Link 15 Source	0	351	ICR		0	
179	Internal Link 15 Destination	0	351	ICR		0	
180	Internal Link 16 Source	0	351	ICR		0	
181	Internal Link 16 Destination	0	351	ICR		0	
182	Internal Link 17 Source	0	351	ICR		0	
183	Internal Link 17 Destination	0	351	ICR		0	
184	Internal Link 18 Source	0	351	ICR		0	
185	Internal Link 18 Destination	0	351	ICR		0	
186	Internal Link 19 Source	0	351	ICR		0	
187	Internal Link 19 Destination	0	351	ICR		0	
188	Internal Link 20 Source	0	351	ICR		0	
189	Internal Link 20 Destination	0	351	ICR		0	
190	Reserved	0	65535		RO	0	
191	Reserved	0	65535		RO	0	
192	Reserved	0	65535		RO	0	
193	Run Source	0	351			0	
194	PID Enable	0:False	1:True			0:False	
195	PID Reset	0:False	1:True			0:False	
196	Proportional Gain	0.00	10.00			5.00	
197	Integral Time	0.100s	30.000s			10.000s	
198	Derivative Level	0.00%	100.00%			0.00%	
199	Derivative Response	3.24ms	100.44ms			3.24ms	
200	Integral Clamp	0:False	1:True			0:False	
201	Integral Polarity	0:Unipolar	1:Bipolar			1:Bipolar	
202	Integral Mode	0:Linear	1:Standard			0:Linear	
203	Deadband	0.00%	30.00%			0.00%	
204	PID Anti-Windup Source	0	351	ICR		0	

Tag	Parameter Name	Min	Max	ICR	RO	Preset	User
205	PID Setpoint	-100.00%	100.00%			0.00%	
206	PID Feedback	-100.00%	100.00%			0.00%	
207	PID Error	-200.00%	200.00%		RO	0.00%	
208	PID Trim	-100.00%	100.00%			100.00%	
209	PID Min Scale	0.00%	100.00%			0.00%	
210	PID Scale	-100.00%	100.00%			100.00%	
211	PID Output Mode	0: Bipolar 1: Positive Only 2: Negative Only				0: Bipolar	
212	PID Output	-100.00%	100.00%		RO	0.00%	
213	Proportional Status	-100.00%	100.00%		RO	0.00%	
214	Integral Status	-100.00%	100.00%		RO	0.00%	
215	Derivative Status	-100.00%	100.00%		RO	0.00%	
216	Integral Saturation Status	0:False	1:True		RO	0:False	
217	Integral Hold Status	0:False	1:True		RO	0:False	
218	Reserved	0	65535		RO	0	
219	Reserved	0	65535		RO	0	
220	Reserved	0	65535		RO	0	
221	Reserved	0	65535		RO	0	
222	Line Speed	-100.00%	100.00%			0.00%	
223	Line Speed Sum	-100.00%	100.00%			0.00%	
224	Roll Speed	-100.00%	100.00%		RO	0.00%	
225	Roll Speed Sum	-100.00%	100.00%		RO	0	
226	Roll Type	0: Winder	1: Unwinder	ICR		0: Winder	
227	Diameter Select	0: None 1: External 2: Roll Revolutions 3: Line Revolutions 4: Line Speed/Roll Speed				0: None	
228	Core Diameter	0.01 UU♣	200.00 UU♣			1.00 UU♣	
229	Max Diameter	0.01 UU♣	200.00 UU♣			10.00 UU♣	
230	Revolutions	0	65535			0	
231	Length Per Revolution	0.001 UU♣	20.000 UU♣			0.001 UU♣	
232	External Diameter Ratio	0.00%	100.00%			0.00%	
233	External Roll Speed	0.00%	100.00%			0.00%	
234	Diameter Hold	0:False	1:True			0:False	
235	Zero Speed	0.00%	100.00%			2.00%	
236	Diameter Filter	0	15			0	
237	Thickness Select (MSB)	0	1			0	
238	Thickness Select (LSB)	0	3			0	
239	Thickness 0	0.001 UU♣	20.000 UU♣			0.001 UU♣	
240	Thickness 1	0.001 UU♣	20.000 UU♣			0.001 UU♣	
241	Thickness 2	0.001 UU♣	20.000 UU♣			0.001 UU♣	
242	Thickness 3	0.001 UU♣	20.000 UU♣			0.001 UU♣	
243	Core/Diameter Ratio	0.00%	100.00%		RO	100.00%	
244	Diameter/Max Ratio	0.00%	100.00%		RO	10.00%	
245	Diameter	0.01 UU♣	200.00 UU♣		RO	1.00 UU♣	
246	Tension Setpoint	0.00%	100.00%			0.00%	
247	Taper Diameter	0.01 UU♣	200.00 UU♣			0.01 UU♣	
248	Taper Percentage	0.00%	100.00%			0.00%	
249	Tension Demand	0.00%	100.00%		RO	0.00%	
250	Reserved	0	65535		RO	0	
251	Reserved	0	65535		RO	0	
252	Reserved	0	65535		RO	0	
253	Reserved	0	65535		RO	0	

Tag	Parameter Name	Min	Max	ICR	RO	Preset	User
254	Logic Gate 1 Mode	0: Off Switch 1: On Switch 2: AND 3: NAND 4: OR 5: NOR 6: XOR 7: XNOR 8: NOT 9: Greater Than 10: Greater Than or Equal 11: Less Than 12:Less Than or Equal 13: Equal 14: Not Equal 15: Absolute Value 16: Negative Absolute Value 17: Invert 18: Sum 19: Difference 20: Ratio 21: Filter 22: Set-Reset Flip Flop 23: Positive Edge Latch 24: Negative Edge Latch 25: On Delay Timer 26: Off Delay Timer 27: One Shot Timer 28: One Shot (Retrigger) 29: One Shot (AND) 30: Repeat Cycle				0: Off Switch	
255	Logic Gate 2 Mode	Same as Logic Gate 1 Mode				0: Off Switch	
256	Logic Gate 3 Mode	Same as Logic Gate 1 Mode				0: Off Switch	
257	Logic Gate 4 Mode	Same as Logic Gate 1 Mode				0: Off Switch	
258	Logic Gate 1 Input A	-200.00%♠	200.00%♠			0.00%♠	
259	Logic Gate 2 Input A	-200.00%♠	200.00%♠			0.00%♠	
260	Logic Gate 3 Input A	-200.00%♠	200.00%♠			0.00%♠	
261	Logic Gate 4 Input A	-200.00%♠	200.00%♠			0.00%♠	
262	Logic Gate 1 Input B	-200.00%♠	200.00%♠			0.00%♠	
263	Logic Gate 2 Input B	-200.00%♠	200.00%♠			0.00%♠	
264	Logic Gate 3 Input B	-200.00%♠	200.00%♠			0.00%♠	
265	Logic Gate 4 Input B	-200.00%♠	200.00%♠			0.00%♠	
266	Logic Gate 1 Output	-200.00%♠	200.00%♠		RO	0.00%♠	
267	Logic Gate 2 Output	-200.00%♠	200.00%♠		RO	0.00%♠	
268	Logic Gate 3 Output	-200.00%♠	200.00%♠		RO	0.00%♠	
269	Logic Gate 4 Output	-200.00%♠	200.00%♠		RO	0.00%♠	
270	Reserved	0	65535		RO	0	
271	Reserved	0	65535		RO	0	
272	Reserved	0	65535		RO	0	
273	Reserved	0	65535		RO	0	
274	Reference Select 1 (LSB)	0	3			0	
275	Reference Select 1 (MSB)	0	1			0	
276	Reference Select 1 Reference 0	-200.00%	200.00%			0.00%	
277	Reference Select 1 Reference 1	-200.00%	200.00%			0.00%	
278	Reference Select 1 Reference 2	-200.00%	200.00%			0.00%	
279	Reference Select 1 Reference 3	-200.00%	200.00%			0.00%	
280	Reference Select 1 Output	-200.00%	200.00%		RO	0.00%	

Tag	Parameter Name	Min	Max	ICR	RO	Preset	User
281	Reference Select 2 (LSB)	0	3			0	
282	Reference Select 2 (MSB)	0	1			0	
283	Reference Select 2 Reference 0	-200.00%	200.00%			0.00%	
284	Reference Select 2 Reference 1	-200.00%	200.00%			0.00%	
285	Reference Select 2 Reference 2	-200.00%	200.00%			0.00%	
286	Reference Select 2 Reference 3	-200.00%	200.00%			0.00%	
287	Reference Select 2 Output	-200.00%	200.00%		RO	0.00%	
288	Reserved	0	65535		RO	0	
289	Reserved	0	65535		RO	0	
290	Reserved	0	65535		RO	0	
291	Reserved	0	65535		RO	0	
292	Diameter Torque Trim	0.00%	100.00%			100.00%	
293	Diameter Torque	0.00%	100.00%		RO	0.00%	
294	Inertia Mode	0:Accel	1:Decel			0:Accel	
295	Sensitivity	1	10			1	
296	Inertia Compensation	0.00%	100.00%			0.00%	
297	Line Speed Status	0:Decel 1:Steady 2:Accel			RO	1:Steady	
298	Inertia Torque	0.00%	100.00%			0.00%	
299	Friction Compensation	0.00%	100.00%			0.00%	
300	Friction Torque	0.00%	100.00%		RO	0.00%	
301	Torque Bias	0.00%	100.00%			0.00%	
302	Pulse Threshold	0.00%	100.00%			1.00%	
303	Pulse Level	0.00%	100.00%			0.00%	
304	Pulse Time	0.1 Secs	10.0 Secs			0.1 Secs	
305	Pulse Torque	0.00%	100.00%		RO	0.00%	
306	Torque Sum	-100.00%	100.00%			0.00%	
307	Total Torque	0.00%	100.00%		RO	0.00%	
308	Reserved	0	65535		RO	0	
309	Reserved	0	65535		RO	0	
310	Reserved	0	65535		RO	0	
311	Reserved	0	65535		RO	0	
312	Processing Order 2	0	28			2	
313	Processing Order 3	0	28			3	
314	Processing Order 4	0	28			4	
315	Processing Order 5	0	28			5	
316	Processing Order 6	0	28			6	
317	Processing Order 7	0	28			7	
318	Processing Order 8	0	28			8	
319	Processing Order 9	0	28			9	
320	Processing Order 10	0	28			10	
321	Processing Order 11	0	28			11	
322	Processing Order 12	0	28			12	
323	Processing Order 13	0	28			13	
324	Processing Order 14	0	28			14	
325	Processing Order 15	0	28			15	
326	Processing Order 16	0	28			16	
327	Processing Order 17	0	28			17	
328	Processing Order 18	0	28			18	
329	Processing Order 19	0	28			19	
330	Processing Order 20	0	28			20	
331	Processing Order 21	0	28			21	
332	Processing Order 22	0	28			22	
333	Processing Order 23	0	28			23	

Tag	Parameter Name	Min	Max	ICR	RO	Preset	User
334	Processing Order 24	0	28			24	
335	Processing Order 25	0	28			25	
336	Processing Order 26	0	28			26	
337	Processing Order 27	0	28			27	
338	Processing Order 28	0	28			28	
339	Reserved	0	65535		RO	0	
340	Reserved	0	65535		RO	0	
341	Reserved	0	65535		RO	0	
342	Reserved	0	65535		RO	0	
343	Reserved	0	65535		RO	0	
344	Reserved	0	65535		RO	0	
345	Reserved	0	65535		RO	0	
346	Reserved	0	65535		RO	0	
347	Reserved	0	65535		RO	0	
348	Reserved	0	65535		RO	0	
349	Reserved	0	65535		RO	0	
350	Reserved	0	65535		RO	0	
351	Reserved	0	65535		RO	0	

♣UU=User Units. Can be any type of length in engineering units such as inches, millimeters, etc… All parameters of this type must be entered in the same units.
♦Note: The units and decimal places shown are the default. However, these values will change to match those of the source or destination parameter.
♠Note: The units and decimal places shown are the default. However, these values will change dependent upon the logic gate mode.

8 Modbus® Overview

8.1 Modbus® Protocol

The MicroManager supports a subset of the Modbus® RTU communications protocol. This section describes the MicroManager's implementation of the protocol. For a complete detailed specification of the entire Modbus® protocol, please refer to http://www.modbus.org.

In the MicroManager, functions 1,2,3,4,5,6,8,15, & 16 are supported. The message format or frame varies depending upon which function code is used. Each frame is started by the slave address and ends with a CRC-16 error checking code. If the slave addresses do not match or the CRC-16 code is invalid, the slave ignores the message and no response is returned. The MicroManager acts as a slave (server) to a single master (client). Bus contentions are avoided since the Modbus® master initiates all communications. Slave devices only place data on the bus in response to a master's request. Each slave device on the bus must have a unique network address.

Frames consist of 8 bit data bytes. Parity can set for None, Odd, or Even. Frames are separated on the bus by a silent period in which no data transmissions occur. This silent period thus signals devices on the bus when a frame has ended and can now begin to examine the frame data. Bytes within a frame must therefore be sent in a continuous stream to avoid silent periods.

The Modbus® protocol uses two general types of data: bits and registers. Registers are composed of 16 bits. Some slave devices further divide each of these data types depending upon its method of access (read-write or read-only). The MicroManager makes no distinction between read-write and read-only with respect to the command. For example,

any register can be read by using Function Code 3 or 4, and any bit can be read using Function Codes 1 or 2. Attempts to write a value to a read-only parameter are ignored.

Since all of the MicroManager's parameters are implemented internally as 16 bit registers, each parameter can be accessed by using a bit or a register command. Thus, a register can be read or written to by a bit command. In these cases, any non-zero value is interpreted as True (1) and zero is interpreted as False (0).

In the following, hexadecimal number are represented with an 'h' suffix and binary numbers with a 'b' suffix. Decimal data is shown with no suffix.

Code	Function	Data Type	Access	Data Type Code
1 (01h)	Read Bits	bit	(read-write)	0x
2 (02h)	Read Bits	bit	(read-only)	1x
3 (03h)	Read Multiple Registers	16 bit register	(read-write)	4x
4 (04h)	Read Multiple Registers	16 bit register	(read-only)	3x
5 (05h)	Write Single Bit	bit	(read-write)	0x
6 (06h)	Write Single Register	16 bit register	(read-write)	4x
8 (08h)	Diagnostics (Loopback)	-	-	-
15 (0Fh)	Write Multiple Bits	bit	(read-write)	0x
16 (10h)	Write Multiple Registers	16 bit register	(read-write)	4x

Table 16: Supported Modbus® Functions

Function Code 1 (01h) Read Bits
In this example, Function Code 1 is used to read the status of the 4 digital inputs (i.e. parameters 53-56). Digital Inputs 1, 2, & 4 are on.

Master Command

Description		Data
Slave Address		01h
Function Code		01h
Starting Address	Upper	00h
	Lower	34h
Quantity	Upper	00h
	Lower	04h
CRC-16	Lower	7Ch
	Upper	07h

} 53-1=0034h*

Normal Slave Response

Description		Data
Slave Address		01h
Function Code		01h
Byte Count		01h
Data		0Bh
CRC-16	Lower	10h
	Upper	4Fh

← 0Bh=0000 1011b

N/A
N/A
N/A
N/A
Parameter 56
Parameter 55
Parameter 54
Parameter 53

Error Slave Response

Description		Data
Slave Address		01h
Function Code		81h
Error Code		02h
CRC-16	Lower	C1h
	Upper	91h

*This assumes the MicroManager Addressing Mode (parameter 137) is set to 1 (default). If Addressing Mode is set to 0, then the Address does not need to be decremented by one. In this mode a value of 0035h would be used.

Function Code 2 (02h) Read Bits

In this example, Function Code 2 is used to read the status of the 4 digital inputs (i.e. parameters 53-56). Digital Inputs 2 & 3 are on.

Master Command

Description		Data
Slave Address		01h
Function Code		02h
Starting Address	Upper	00h
	Lower	34h
Quantity	Upper	00h
	Lower	04h
CRC-16	Lower	38h
	Upper	07h

} 53-1=0034h*

Normal Slave Response

Description		Data
Slave Address		01h
Function Code		02h
Byte Count		01h
Data		06h
CRC-16	Lower	21h
	Upper	8Ah

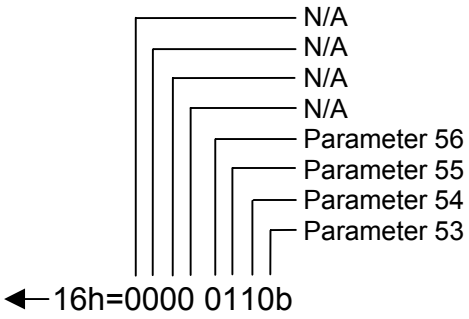

Error Slave Response

Description		Data
Slave Address		01h
Function Code		82h
Error Code		03h
CRC-16	Lower	00h
	Upper	A1h

*This assumes the MicroManager Addressing Mode (parameter 137) is set to 1 (default). If Addressing Mode is set to 0, then the Address does not need to be decremented by one. In this mode a value of 0035h would be used.

Function Code 3 (03h) Read Multiple Registers
In this example, Function Code 3 is used to read the status of the Analog Inputs 1 & 2 (i.e. parameters 17-18).

Master Command

Description		Data	
Slave Address		01h	
Function Code		03h	
Starting Address	Upper	00h	} 17-1=0010h*
	Lower	10h	
Quantity	Upper	00h	
	Lower	02h	
CRC-16	Lower	C5h	
	Upper	CEh	

Normal Slave Response

Description		Data	
Slave Address		01h	
Function Code		03h	
Byte Count		04h	
Register Data	Upper	07h	} 0764h=1892
	Lower	64h	
Register Data	Upper	0Bh	} 0BF4h=3060
	Lower	F4h	
CRC-16	Lower	BCh	
	Upper	2Fh	

Error Slave Response

Description		Data
Slave Address		01h
Function Code		83h
Error Code		02h
CRC-16	Lower	C0h
	Upper	F1h

*This assumes the MicroManager Addressing Mode (parameter 137) is set to 1 (default). If Addressing Mode is set to 0, then the Address does not need to be decremented by one. In this mode a value of 0011h would be used.

Function Code 4 (04h) Read Multiple Registers
In this example, Function Code 4 is used to read the value of Line Speed (i.e. parameter 222). When read, the value of Line Speed was 56.47%.

Master Command

Description		Data	
Slave Address		01h	
Function Code		04h	
Starting Address	Upper	00h	} 222-1=00DDh*
	Lower	DDh	
Quantity	Upper	00h	
	Lower	01h	
CRC-16	Lower	A1h	
	Upper	F0h	

Normal Slave Response

Description		Data	
Slave Address		01h	
Function Code		04h	
Byte Count		02h	
Register Data	Upper	16h	} 160Fh=5647
	Lower	0Fh	
CRC-16	Lower	F7h	
	Upper	54h	

Error Slave Response

Description		Data
Slave Address		01h
Function Code		84h
Error Code		03h
CRC-16	Lower	03h
	Upper	01h

*This assumes the MicroManager Addressing Mode (parameter 137) is set to 1 (default). If Addressing Mode is set to 0, then the Address does not need to be decremented by one. In this mode a value of 00DEh would be used.

Function Code 5 (05h) Write Single Bit
In this example, Function Code 5 is used to write a value of 1 to PID Loop 1 Enable (i.e. parameter 194).

Master Command

Description		Data
Slave Address		01h
Function Code		05h
Address	Upper	00h
	Lower	C1h
Data	Upper	FFh
	Lower	00h
CRC-16	Lower	DDh
	Upper	C6h

} 194-1=00C1h*

} FF00h is used to turn bit on. 0000h would be used to turn bit off.

Normal Slave Response

Description		Data
Slave Address		01h
Function Code		05h
Address	Upper	00h
	Lower	C1h
Register Data	Upper	FFh
	Lower	00h
CRC-16	Lower	DDh
	Upper	C6h

Error Slave Response

Description		Data
Slave Address		01h
Function Code		85h
Error Code		02h
CRC-16	Lower	C3h
	Upper	51h

*This assumes the MicroManager Addressing Mode (parameter 137) is set to 1 (default). If Addressing Mode is set to 0, then the Address does not need to be decremented by one. In this mode a value of 00C2h would be used.

Function Code 6 (06h) Write Single Register
In this example, Function Code 6 is used to write a value of 34.56% to Tension Setpoint (i.e. parameter 246).

Master Command

Description		**Data**	
Slave Address		01h	
Function Code		06h	
Address	Upper	00h	246-1=00F5h*
	Lower	F5h	
Data	Upper	0Dh	3456=0D80h
	Lower	80h	
CRC-16	Lower	9Ch	
	Upper	C8h	

Normal Slave Response

Description		**Data**
Slave Address		01h
Function Code		06h
Address	Upper	00h
	Lower	F5h
Register Data	Upper	0Dh
	Lower	80h
CRC-16	Lower	9Ch
	Upper	C8h

Error Slave Response

Description		**Data**
Slave Address		01h
Function Code		86h
Error Code		02h
CRC-16	Lower	C3h
	Upper	A1h

*This assumes the MicroManager Addressing Mode (parameter 137) is set to 1 (default). If Addressing Mode is set to 0, then the Address does not need to be decremented by one. In this mode a value of 00F6h would be used.

Function Code 8 (08h) Diagnostics, Echo Data
In this example, Function Code 8 (Diagnostics) with Sub Code 0 (Echo Data) is used to test communications with a slave device. The slave should echo back the received data.

Master Command

Description		**Data**
Slave Address		01h
Function Code		08h
Sub Code	Upper	00h
	Lower	00h
Data	Upper	AAh
	Lower	55h
CRC-16	Lower	5Eh
	Upper	94h

Normal Slave Response

Description		**Data**
Slave Address		01h
Function Code		08h
Sub Code	Upper	00h
	Lower	00h
Data	Upper	AAh
	Lower	55h
CRC-16	Lower	5Eh
	Upper	94h

Error Slave Response

Description		**Data**
Slave Address		01h
Function Code		88h
Error Code		01h
CRC-16	Lower	87h
	Upper	C0h

Function Code 15 (0Fh) Write Multiple Bits
In this example, Function Code 15 is used to write a value of 0 to Ref Select 1 LSB and a value of 1 to Ref Select 1 MSB (i.e. parameters 274 & 275).

Master Command

Description		Data
Slave Address		01h
Function Code		0Fh
Start Address	Upper	01h
	Lower	11h
Num Bits	Upper	00h
	Lower	02h
Byte Count		01h
Data		02h
CRC-16	Lower	A2h
	Upper	84h

274-1=0111h*

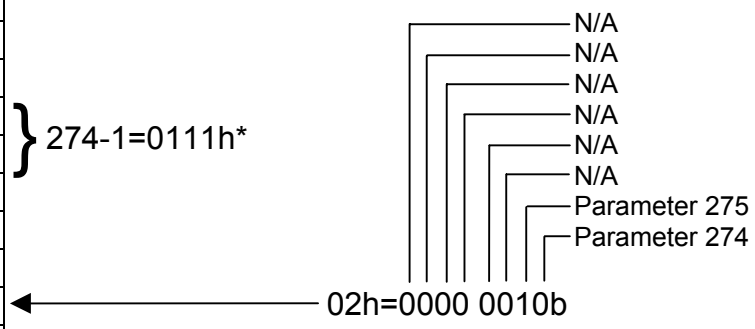

Normal Slave Response

Description		Data
Slave Address		01h
Function Code		0Fh
Start Address	Upper	01h
	Lower	11h
Num Bits	Upper	00h
	Lower	02h
CRC-16	Lower	85h
	Upper	F3h

Error Slave Response

Description		Data
Slave Address		01h
Function Code		8Fh
Error Code		02h
CRC-16	Lower	C5h
	Upper	F1h

*This assumes the MicroManager Addressing Mode (parameter 137) is set to 1 (default). If Addressing Mode is set to 0, then the Address does not need to be decremented by one. In this mode a value of 0112h would be used.

Function Code 16 (10h) Write Multiple Registers
In this example, Function Code 16 is used to write the values 1.234 and 5.678 to the Thickness 0 and Thickness 1 (i.e. parameters 239 & 240).

Master Command

Description		Data	
Slave Address		01h	
Function Code		10h	
Start Address	Upper	00h	} 239-1=00EEh*
	Lower	EEh	
Register Count	Upper	00h	
	Lower	02h	
Byte Count		04h	
Register Data	Upper	04h	} 1234=04D2h
	Lower	D2h	
Register Data	Upper	16h	} 5678=162Eh
	Lower	2Eh	
CRC-16	Lower	53h	
	Upper	1Eh	

Normal Slave Response

Description		Data
Slave Address		01h
Function Code		10h
Start Address	Upper	00h
	Lower	EEh
Register Count	Upper	00h
	Lower	02h
CRC-16	Lower	21h
	Upper	FDh

Error Slave Response

Description		Data
Slave Address		01h
Function Code		90h
Error Code		02h
CRC-16	Lower	CDh
	Upper	C1h

*This assumes the MicroManager Addressing Mode (parameter 137) is set to 1 (default). If Addressing Mode is set to 0, then the Address does not need to be decremented by one. In this mode a value of 00EFh would be used.

8.3 CRC-16 Calculations

CRC stands for Cyclical Redundancy Check and is a 16 bit value appended to all Modbus® frames. When a device (either master or slave) places data on the bus, the CRC value is appended to the message. The receiving device also calculates a CRC value as it receives the message. The receiver compares its calculated value to the one received. A transmission error has occurred if the values do not match.

Please note that when the CRC value is appended to a message, the low byte is appended first followed by the upper byte. This is different from all other Modbus® data fields where the upper byte is sent first followed by the lower byte.

Below is some example C code to generate a CRC-16 value. The method used below provides for fast generation of the CRC value by using lookup tables that contain pre-calculated CRC values. Please refer to the Modbus® specification (available at http://www.modbus.org) for more details.

```
// The function returns the CRC value. Note that this function internally swaps the high and low CRC bytes.
// Thus, the resulting value can be appended directly to the Modbus® message. Msg is a pointer to the
// message that CRC is to be calculated from. DataLen is the quantity of bytes in the message
unsigned int CRC16 (unsigned char *Msg, unsigned char DataLen)
        {
        unsigned char CRCHi = 0xFF;                 // Initialize high byte of CRC
        unsigned char CRCLo = 0xFF;                 // Initialize low byte of CRC
        unsigned char Index;                        // index into CRC lookup table
        while (DataLen--)                           // pass through message buffer
                {
                Index = CRCLo ^ *Msg++;             //calculate the CRC
                CRCLo = CRCHi ^ CRCHi[Index} ;
                CRCHi = CRCLo[Index] ;
                }
        return (CRCHi << 8 | CRCLo) ;
        }
```

High-Order Byte Table

```
// Table of CRC values for high–order byte
static unsigned char CRCHi[] = {
        0x00,0xC1,0x81,0x40,0x01,0xC0,0x80,0x41,0x01,0xC0,0x80,0x41,0x00,0xC1,0x81,0x40,
        0x01,0xC0,0x80,0x41,0x00,0xC1,0x81,0x40,0x00,0xC1,0x81,0x40,0x01,0xC0,0x80,0x41,
        0x01,0xC0,0x80,0x41,0x00,0xC1,0x81,0x40,0x00,0xC1,0x81,0x40,0x01,0xC0,0x80,0x41,
        0x00,0xC1,0x81,0x40,0x01,0xC0,0x80,0x41,0x01,0xC0,0x80,0x41,0x00,0xC1,0x81,0x40,
        0x01,0xC0,0x80,0x41,0x00,0xC1,0x81,0x40,0x00,0xC1,0x81,0x40,0x01,0xC0,0x80,0x41,
        0x00,0xC1,0x81,0x40,0x01,0xC0,0x80,0x41,0x01,0xC0,0x80,0x41,0x00,0xC1,0x81,0x40,
        0x00,0xC1,0x81,0x40,0x01,0xC0,0x80,0x41,0x01,0xC0,0x80,0x41,0x00,0xC1,0x81,0x40,
        0x01,0xC0,0x80,0x41,0x00,0xC1,0x81,0x40,0x00,0xC1,0x81,0x40,0x01,0xC0,0x80,0x41,
        0x01,0xC0,0x80,0x41,0x00,0xC1,0x81,0x40,0x00,0xC1,0x81,0x40,0x01,0xC0,0x80,0x41,
        0x00,0xC1,0x81,0x40,0x01,0xC0,0x80,0x41,0x01,0xC0,0x80,0x41,0x00,0xC1,0x81,0x40,
        0x00,0xC1,0x81,0x40,0x01,0xC0,0x80,0x41,0x01,0xC0,0x80,0x41,0x00,0xC1,0x81,0x40,
        0x01,0xC0,0x80,0x41,0x00,0xC1,0x81,0x40,0x00,0xC1,0x81,0x40,0x01,0xC0,0x80,0x41,
        0x00,0xC1,0x81,0x40,0x01,0xC0,0x80,0x41,0x01,0xC0,0x80,0x41,0x00,0xC1,0x81,0x40,
        0x01,0xC0,0x80,0x41,0x00,0xC1,0x81,0x40,0x00,0xC1,0x81,0x40,0x01,0xC0,0x80,0x41,
        0x01,0xC0,0x80,0x41,0x00,0xC1,0x81,0x40,0x00,0xC1,0x81,0x40,0x01,0xC0,0x80,0x41,
        0x00,0xC1,0x81,0x40,0x01,0xC0,0x80,0x41,0x01,0xC0,0x80,0x41,0x00,0xC1,0x81,0x40
        } ;
```

Low-Order Byte Table

```
// Table of CRC values for low–order byte
static char CRCLo[] = {
        0x00,0xC0,0xC1,0x01,0xC3,0x03,0x02,0xC2,0xC6,0x06,0x07,0xC7,0x05,0xC5,0xC4,0x04,
        0xCC,0x0C,0x0D,0xCD,0x0F,0xCF,0xCE,0x0E,0x0A,0xCA,0xCB,0x0B,0xC9,0x09,0x08,0xC8,
        0xD8,0x18,0x19,0xD9,0x1B,0xDB,0xDA,0x1A,0x1E,0xDE,0xDF,0x1F,0xDD,0x1D,0x1C,0xDC,
        0x14,0xD4,0xD5,0x15,0xD7,0x17,0x16,0xD6,0xD2,0x12,0x13,0xD3,0x11,0xD1,0xD0,0x10,
        0xF0,0x30,0x31,0xF1,0x33,0xF3,0xF2,0x32,0x36,0xF6,0xF7,0x37,0xF5,0x35,0x34,0xF4,
        0x3C,0xFC,0xFD,0x3D,0xFF,0x3F,0x3E,0xFE,0xFA,0x3A,0x3B,0xFB,0x39,0xF9,0xF8,0x38,
        0x28,0xE8,0xE9,0x29,0xEB,0x2B,0x2A,0xEA,0xEE,0x2E,0x2F,0xEF,0x2D,0xED,0xEC,0x2C,
        0xE4,0x24,0x25,0xE5,0x27,0xE7,0xE6,0x26,0x22,0xE2,0xE3,0x23,0xE1,0x21,0x20,0xE0,
        0xA0,0x60,0x61,0xA1,0x63,0xA3,0xA2,0x62,0x66,0xA6,0xA7,0x67,0xA5,0x65,0x64,0xA4,
        0x6C,0xAC,0xAD,0x6D,0xAF,0x6F,0x6E,0xAE,0xAA,0x6A,0x6B,0xAB,0x69,0xA9,0xA8,0x68,
        0x78,0xB8,0xB9,0x79,0xBB,0x7B,0x7A,0xBA,0xBE,0x7E,0x7F,0xBF,0x7D,0xBD,0xBC,0x7C,
        0xB4,0x74,0x75,0xB5,0x77,0xB7,0xB6,0x76,0x72,0xB2,0xB3,0x73,0xB1,0x71,0x70,0xB0,
        0x50,0x90,0x91,0x51,0x93,0x53,0x52,0x92,0x96,0x56,0x57,0x97,0x55,0x95,0x94,0x54,
        0x9C,0x5C,0x5D,0x9D,0x5F,0x9F,0x9E,0x5E,0x5A,0x9A,0x9B,0x5B,0x99,0x59,0x58,0x98,
        0x88,0x48,0x49,0x89,0x4B,0x8B,0x8A,0x4A,0x4E,0x8E,0x8F,0x4F,0x8D,0x4D,0x4C,0x8C,
        0x44,0x84,0x85,0x45,0x87,0x47,0x46,0x86,0x82,0x42,0x43,0x83,0x41,0x81,0x80,0x40
        };
```

GENERAL CONNECTIONS

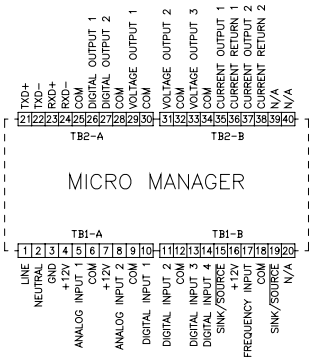

EXAMPLE FREQ INPUT

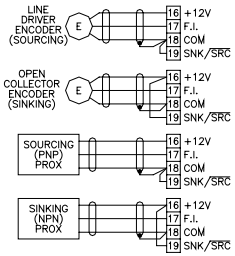

EXAMPLE BIPOLAR ANALOG OUTPUT

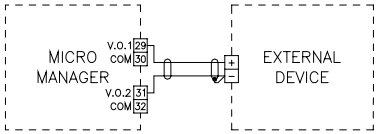

WHEN THE BIPOLAR ANALOG OUTPUT SCHEME IS USED, NO OTHER CIRCUIT COMMON CONNECTIONS CAN BE MADE BETWEEN THE MICROMANAGER AND THE EXTERNAL DEVICE. AN ISOLATOR CARD MAY BE USED TO ELIMINATE THIS RESTRICTION.

EXAMPLE DIGITAL INPUTS

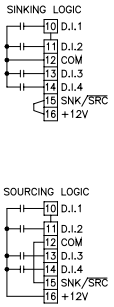

EXAMPLE CURRENT OUTPUT

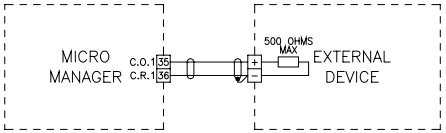

DRAWN BY: BKP	DATE: 10/23/07	CAROTRON Driven by Excellence	
APPROVED BY:	DATE:	HEATH SPRINGS, SC TEL 803-286-8614 FAX 803-286-6063	
TOLERANCES: 2 DEC. PL. ± .010" 3 DEC. PL. ± .005"		TITLE: MICROMANAGER MM3000-CTCW CONNECTION DIAGRAM	
SCALE:			
DRAWING NUMBER: D13548	REV. A	SH. 1 OF 3	

P3=1

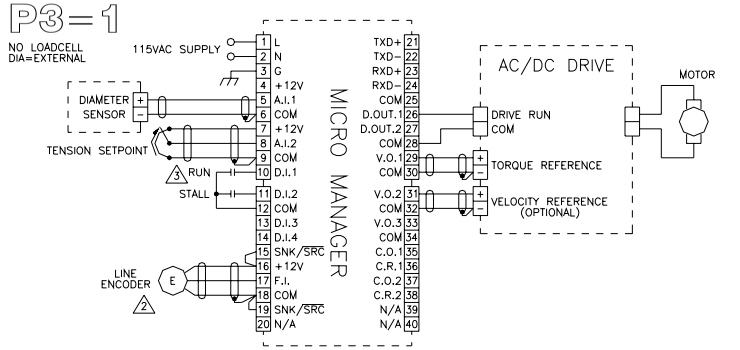

P3=2

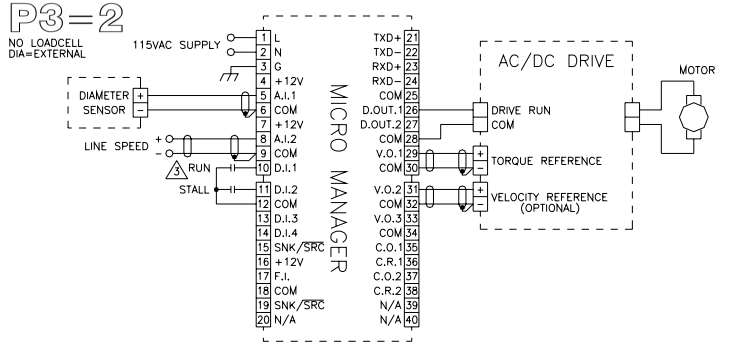

P3=3

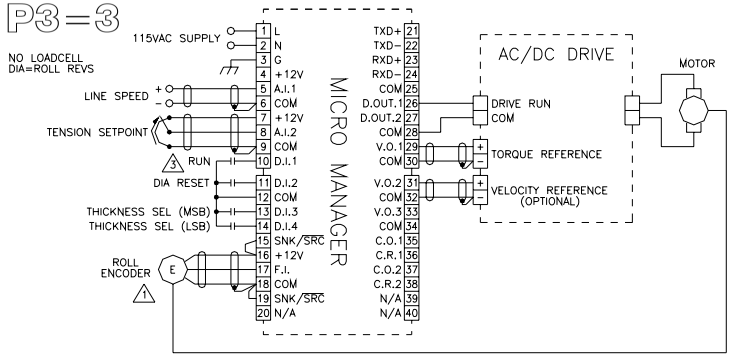

P3=4

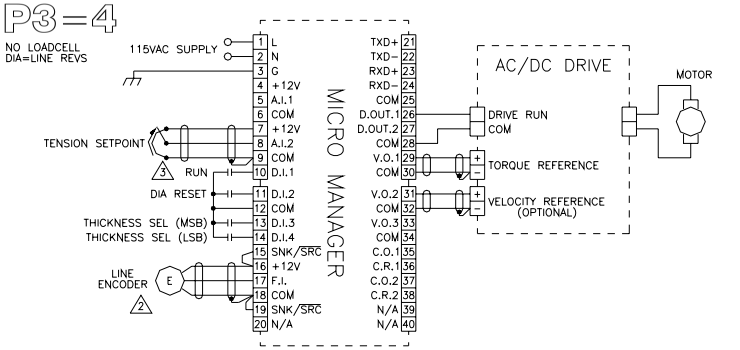

P3=5

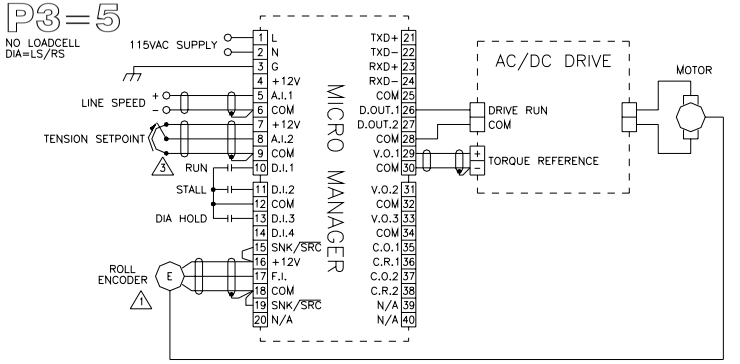

P3=6

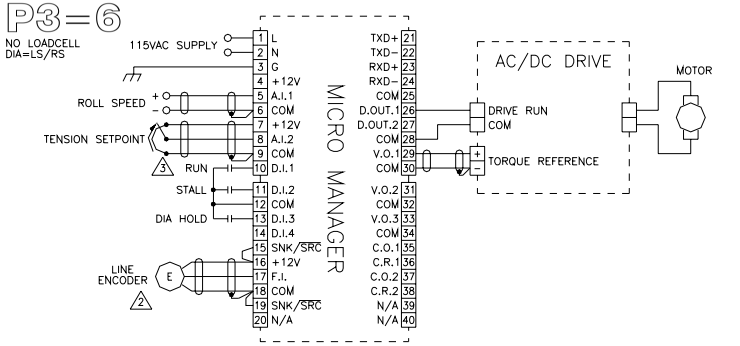

1. IN THIS DIAGRAM, A MOTOR MOUNTED ENCODER PROVIDES THE ROLL REVOLUTIONS FEEDBACK. THIS SIGNAL COULD ALSO BE PROVIDED BY A PROXIMITY SWITCH ON THE MOTOR OR ROLL SHAFT. SEE THE EXAMPLE FREQ INPUT SECTION ON SHEET 1 FOR OTHER WIRING SCHEMES.
2. IN THIS DIAGRAM, A MOTOR MOUNTED ENCODER PROVIDES THE LINE SPEED FEEDBACK. THIS SIGNAL COULD ALSO BE PROVIDED BY A PROXIMITY SWITCH ON THE MOTOR OR ROLL SHAFT. SEE THE EXAMPLE FREQ INPUT SECTION ON SHEET 1 FOR OTHER WIRING SCHEMES.
3. THE MICROMANAGER RUN CONTACT (DIGITAL INPUT 1) IS OFTEN SUPPLIED BY A RUN CONTACT ON THE LINE SPEED DRIVE (CONTACT IS CLOSED ANYTIME THE DRIVE IS RUNNING).

DRAWN BY: BKP	DATE: 10/23/07
APPROVED BY:	DATE:
TOLERANCES: ± 2 DEC PL. = .010" ± 3 DEC PL. = .005"	CAROTRON Driven by Excellence HEATH SPRINGS, SC TEL 803-286-9614 FAX 803-286-6063
SCALE:	TITLE: MICROMANAGER MM3000-CTCW CONNECTION DIAGRAM
DRAWING NUMBER: D13548	REV. A SH. 2 OF 3

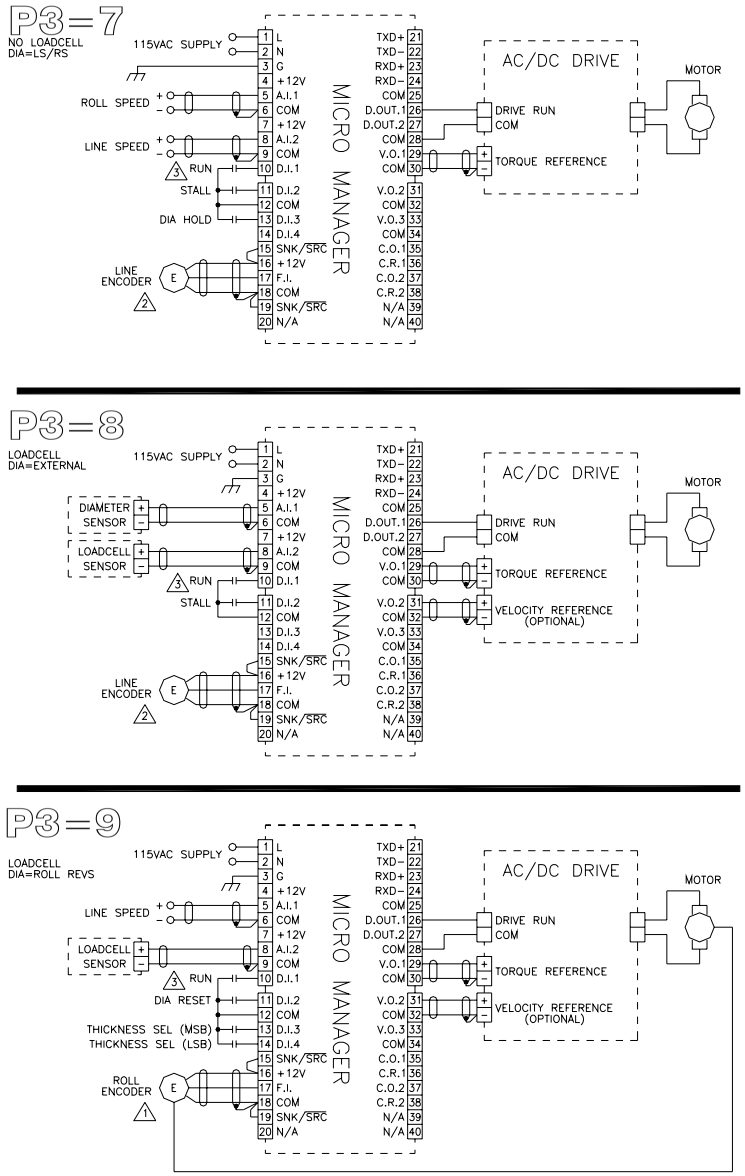

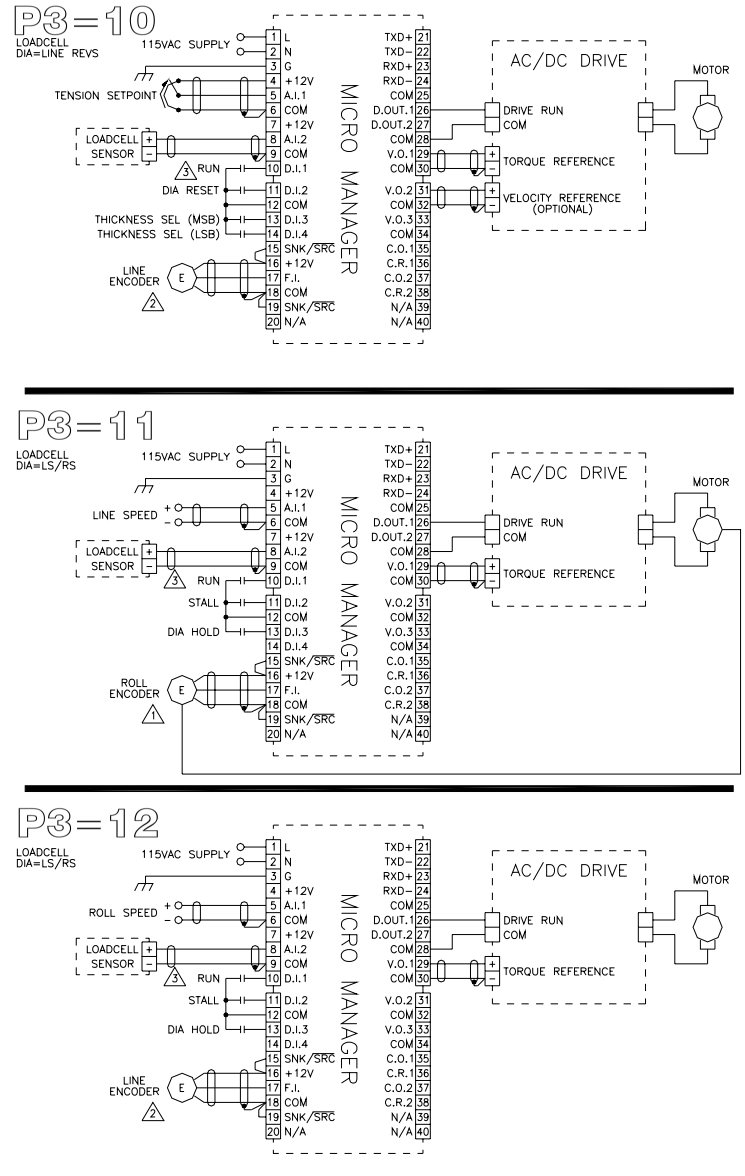

1. IN THIS DIAGRAM, A MOTOR MOUNTED ENCODER PROVIDES THE ROLL REVOLUTIONS FEEDBACK. THIS SIGNAL COULD ALSO BE PROVIDED BY A PROXIMITY SWITCH ON THE MOTOR OR ROLL SHAFT. SEE THE EXAMPLE FREQ INPUT SECTION ON SHEET 1 FOR OTHER WIRING SCHEMES.
2. IN THIS DIAGRAM, A MOTOR MOUNTED ENCODER PROVIDES THE LINE SPEED FEEDBACK. THIS SIGNAL COULD ALSO BE PROVIDED BY A PROXIMITY SWITCH ON THE MOTOR OR ROLL SHAFT. SEE THE EXAMPLE FREQ INPUT SECTION ON SHEET 1 FOR OTHER WIRING SCHEMES.
3. THE MICROMANAGER RUN CONTACT (DIGITAL INPUT 1) IS OFTEN SUPPLIED BY A RUN CONTACT ON THE LINE SPEED DRIVE (CONTACT IS CLOSED ANYTIME THE DRIVE IS RUNNING).

DRAWN BY: BKP	DATE: 10/23/07	CAROTRON Driven by Excellence
APPROVED BY:	DATE:	HEATH SPRINGS, SC TEL 803-286-8614 FAX 803-286-6063
TOLERANCES: ± 2 DEC. PL. = .010" 3 DEC. PL. = .005"		TITLE: MICROMANAGER MM3000-CTCW CONNECTION DIAGRAM
SCALE:		
DRAWING NUMBER: D13548	REV. A	SH. 3 OF 3

MicroManager SOFTWARE BLOCK DIAGRAM

CTCW: FACTORY PRESET

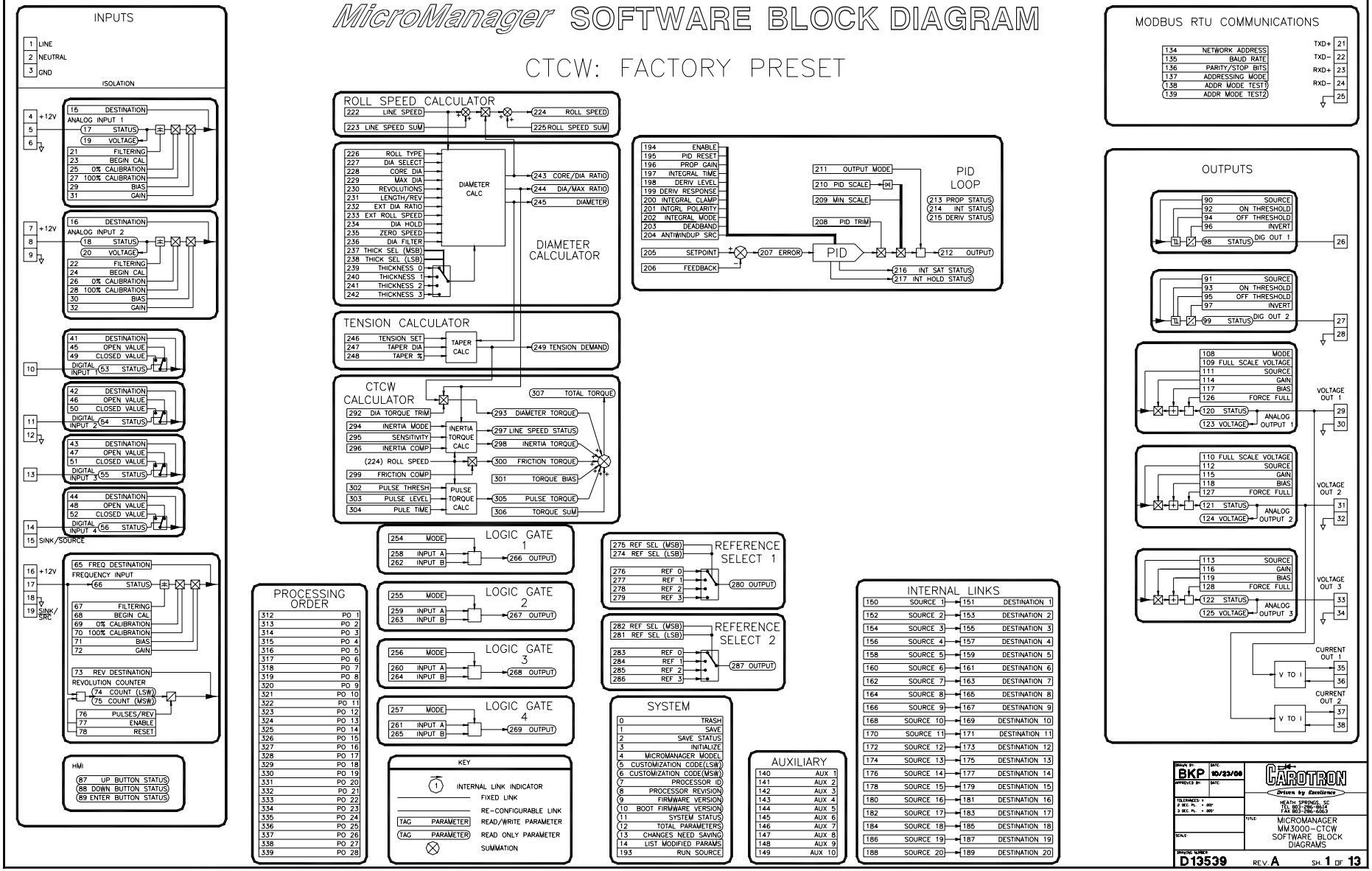

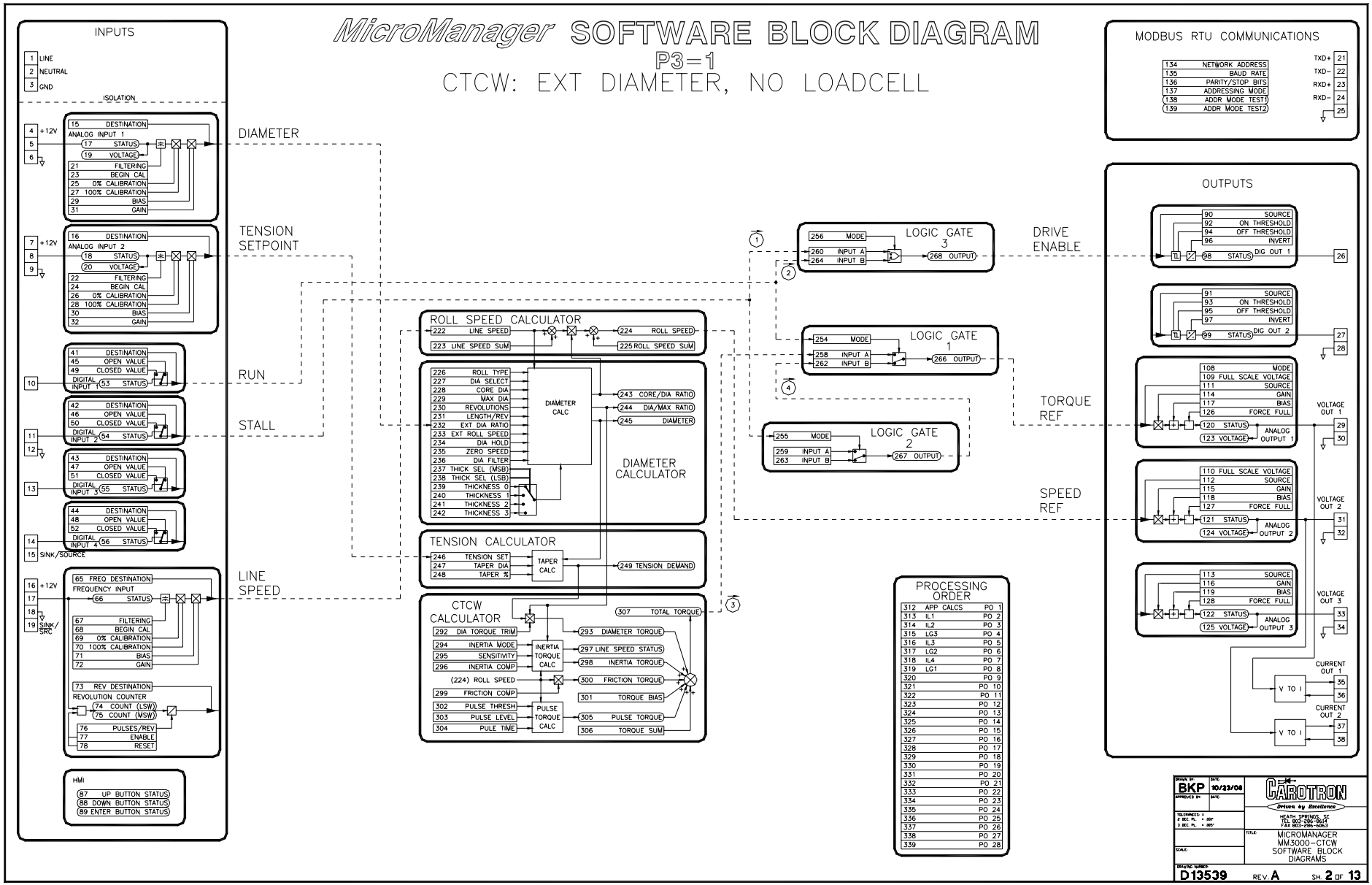
MicroManager SOFTWARE BLOCK DIAGRAM
P3=1
CTCW: EXT DIAMETER, NO LOADCELL
INPUTS
1 LINE
2 NEUTRAL
3 GND
ISOLATION
+12V
ANALOG INPUT 1
15 DESTINATION
17 STATUS
19 VOLTAGE
21 FILTERING
23 BEGIN CAL
25 0% CALIBRATION
27 100% CALIBRATION
29 BIAS
31 GAIN
DIAMETER
ANALOG INPUT 2
16 DESTINATION
18 STATUS
20 VOLTAGE
22 FILTERING
24 BEGIN CAL
26 0% CALIBRATION
28 100% CALIBRATION
30 BIAS
32 GAIN
TENSION SETPOINT
DIGITAL INPUT 1
41 DESTINATION
45 OPEN VALUE
49 CLOSED VALUE
53 STATUS
RUN
DIGITAL INPUT 2
42 DESTINATION
46 OPEN VALUE
50 CLOSED VALUE
54 STATUS
STALL
DIGITAL INPUT 3
43 DESTINATION
47 OPEN VALUE
51 CLOSED VALUE
55 STATUS
DIGITAL INPUT 4
44 DESTINATION
48 OPEN VALUE
52 CLOSED VALUE
56 STATUS
SINK/SOURCE
FREQUENCY INPUT
65 FREQ DESTINATION
66 STATUS
67 FILTERING
68 BEGIN CAL
69 0% CALIBRATION
70 100% CALIBRATION
71 BIAS
72 GAIN
LINE SPEED
REVOLUTION COUNTER
73 REV DESTINATION
74 COUNT (LSW)
75 COUNT (MSW)
76 PULSES/REV
77 ENABLE
78 RESET
HMI
87 UP BUTTON STATUS
88 DOWN BUTTON STATUS
89 ENTER BUTTON STATUS
ROLL SPEED CALCULATOR
222 LINE SPEED
223 LINE SPEED SUM
224 ROLL SPEED
225 ROLL SPEED SUM
DIAMETER CALCULATOR
226 ROLL TYPE
227 DIA SELECT
228 CORE DIA
229 MAX DIA
230 REVOLUTIONS
231 LENGTH/REV
232 EXT DIA RATIO
233 EXT ROLL SPEED
234 DIA HOLD
235 ZERO SPEED
236 DIA FILTER
237 THICK SEL (MSB)
238 THICK SEL (LSB)
239 THICKNESS 0
240 THICKNESS 1
241 THICKNESS 2
242 THICKNESS 3
DIAMETER CALC
243 CORE/DIA RATIO
244 DIA/MAX RATIO
245 DIAMETER
TENSION CALCULATOR
246 TENSION SET
247 TAPER DIA
248 TAPER %
TAPER CALC
249 TENSION DEMAND
CTCW CALCULATOR
292 DIA TORQUE TRIM
294 INERTIA MODE
295 SENSITIVITY
296 INERTIA COMP
(224) ROLL SPEED
299 FRICTION COMP
302 PULSE THRESH
303 PULSE LEVEL
304 PULE TIME
INERTIA TORQUE CALC
PULSE TORQUE CALC
293 DIAMETER TORQUE
297 LINE SPEED STATUS
298 INERTIA TORQUE
300 FRICTION TORQUE
301 TORQUE BIAS
305 PULSE TORQUE
306 TORQUE SUM
307 TOTAL TORQUE
LOGIC GATE 3
256 MODE
260 INPUT A
264 INPUT B
268 OUTPUT
LOGIC GATE 1
254 MODE
258 INPUT A
262 INPUT B
266 OUTPUT
LOGIC GATE 2
255 MODE
259 INPUT A
263 INPUT B
267 OUTPUT
DRIVE ENABLE
TORQUE REF
SPEED REF
PROCESSING ORDER
312 APP CALCS PO 1
313 IL1 PO 2
314 IL2 PO 3
315 LG3 PO 4
316 IL3 PO 5
317 LG2 PO 6
318 IL4 PO 7
319 LG1 PO 8
320 PO 9
321 PO 10
322 PO 11
323 PO 12
324 PO 13
325 PO 14
326 PO 15
327 PO 16
328 PO 17
329 PO 18
330 PO 19
331 PO 20
332 PO 21
333 PO 22
334 PO 23
335 PO 24
336 PO 25
337 PO 26
338 PO 27
339 PO 28
MODBUS RTU COMMUNICATIONS
134 NETWORK ADDRESS
135 BAUD RATE
136 PARITY/STOP BITS
137 ADDRESSING MODE
138 ADDR MODE TEST1
139 ADDR MODE TEST2
TXD+ 21
TXD− 22
RXD+ 23
RXD− 24
25
OUTPUTS
90 SOURCE
92 ON THRESHOLD
94 OFF THRESHOLD
96 INVERT
98 STATUS
DIG OUT 1
26
91 SOURCE
93 ON THRESHOLD
95 OFF THRESHOLD
97 INVERT
99 STATUS
DIG OUT 2
27
28
108 MODE
109 FULL SCALE VOLTAGE
111 SOURCE
114 GAIN
117 BIAS
126 FORCE FULL
120 STATUS
123 VOLTAGE
ANALOG OUTPUT 1
VOLTAGE OUT 1
29
30
110 FULL SCALE VOLTAGE
112 SOURCE
115 GAIN
118 BIAS
127 FORCE FULL
121 STATUS
124 VOLTAGE
ANALOG OUTPUT 2
VOLTAGE OUT 2
31
32
113 SOURCE
116 GAIN
119 BIAS
128 FORCE FULL
122 STATUS
125 VOLTAGE
ANALOG OUTPUT 3
VOLTAGE OUT 3
33
34
V TO I
CURRENT OUT 1
35
36
CURRENT OUT 2
37
38
DRAWN BY: BKP
DATE: 10/23/08
APPROVED BY:
DATE:
TOLERANCES: 2 DEC PL. ± .03" 3 DEC PL. ± .005"
CAROTRON
Driven by Excellence
HEATH SPRINGS, SC
TEL 803-286-8614
FAX 803-286-6063
SCALE:
TITLE: MICROMANAGER WM3000-CTCW SOFTWARE BLOCK DIAGRAMS
DRAWING NUMBER D13539
REV. A
SH. 2 OF 13

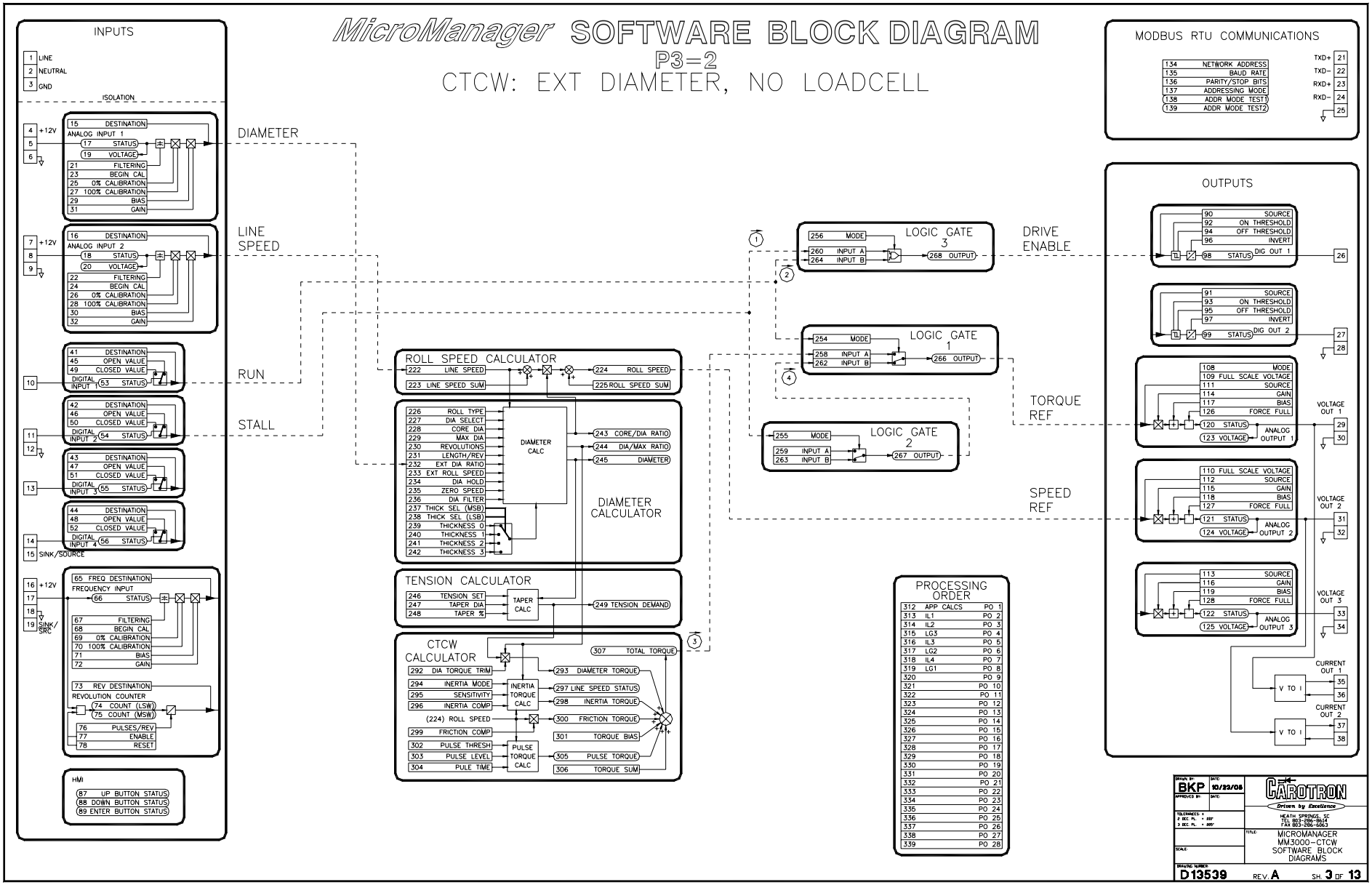
MicroManager SOFTWARE BLOCK DIAGRAM
P3=2
CTCW: EXT DIAMETER, NO LOADCELL
INPUTS
1 LINE
2 NEUTRAL
3 GND
ISOLATION
4 +12V
5
6
15 DESTINATION
ANALOG INPUT 1
17 STATUS
19 VOLTAGE
21 FILTERING
23 BEGIN CAL
25 0% CALIBRATION
27 100% CALIBRATION
29 BIAS
31 GAIN
DIAMETER
7 +12V
8
9
16 DESTINATION
ANALOG INPUT 2
18 STATUS
20 VOLTAGE
22 FILTERING
24 BEGIN CAL
26 0% CALIBRATION
28 100% CALIBRATION
30 BIAS
32 GAIN
LINE SPEED
10
41 DESTINATION
45 OPEN VALUE
49 CLOSED VALUE
DIGITAL INPUT 1
53 STATUS
RUN
11
12
42 DESTINATION
46 OPEN VALUE
50 CLOSED VALUE
DIGITAL INPUT 2
54 STATUS
STALL
13
43 DESTINATION
47 OPEN VALUE
51 CLOSED VALUE
DIGITAL INPUT 3
55 STATUS
14
44 DESTINATION
48 OPEN VALUE
52 CLOSED VALUE
DIGITAL INPUT 4
56 STATUS
15 SINK/SOURCE
16 +12V
17
18
19 SINK/SRC
65 FREQ DESTINATION
FREQUENCY INPUT
66 STATUS
67 FILTERING
68 BEGIN CAL
69 0% CALIBRATION
70 100% CALIBRATION
71 BIAS
72 GAIN
73 REV DESTINATION
REVOLUTION COUNTER
74 COUNT (LSW)
75 COUNT (MSW)
76 PULSES/REV
77 ENABLE
78 RESET
HMI
87 UP BUTTON STATUS
88 DOWN BUTTON STATUS
89 ENTER BUTTON STATUS
ROLL SPEED CALCULATOR
222 LINE SPEED
223 LINE SPEED SUM
224 ROLL SPEED
225 ROLL SPEED SUM
226 ROLL TYPE
227 DIA SELECT
228 CORE DIA
229 MAX DIA
230 REVOLUTIONS
231 LENGTH/REV
232 EXT DIA RATIO
233 EXT ROLL SPEED
234 DIA HOLD
235 ZERO SPEED
236 DIA FILTER
237 THICK SEL (MSB)
238 THICK SEL (LSB)
239 THICKNESS 0
240 THICKNESS 1
241 THICKNESS 2
242 THICKNESS 3
DIAMETER CALC
243 CORE/DIA RATIO
244 DIA/MAX RATIO
245 DIAMETER
DIAMETER CALCULATOR
TENSION CALCULATOR
246 TENSION SET
247 TAPER DIA
248 TAPER %
TAPER CALC
249 TENSION DEMAND
CTCW CALCULATOR
292 DIA TORQUE TRIM
294 INERTIA MODE
295 SENSITIVITY
296 INERTIA COMP
(224) ROLL SPEED
299 FRICTION COMP
302 PULSE THRESH
303 PULSE LEVEL
304 PULE TIME
INERTIA TORQUE CALC
PULSE TORQUE CALC
307 TOTAL TORQUE
293 DIAMETER TORQUE
297 LINE SPEED STATUS
298 INERTIA TORQUE
300 FRICTION TORQUE
301 TORQUE BIAS
305 PULSE TORQUE
306 TORQUE SUM
LOGIC GATE 3
256 MODE
260 INPUT A
264 INPUT B
268 OUTPUT
DRIVE ENABLE
LOGIC GATE 1
254 MODE
258 INPUT A
262 INPUT B
266 OUTPUT
LOGIC GATE 2
255 MODE
259 INPUT A
263 INPUT B
267 OUTPUT
TORQUE REF
SPEED REF
PROCESSING ORDER
312 APP CALCS PO 1
313 IL1 PO 2
314 IL2 PO 3
315 LG3 PO 4
316 IL3 PO 5
317 LG2 PO 6
318 IL4 PO 7
319 LG1 PO 8
320 PO 9
321 PO 10
322 PO 11
323 PO 12
324 PO 13
325 PO 14
326 PO 15
327 PO 16
328 PO 17
329 PO 18
330 PO 19
331 PO 20
332 PO 21
333 PO 22
334 PO 23
335 PO 24
336 PO 25
337 PO 26
338 PO 27
339 PO 28
MODBUS RTU COMMUNICATIONS
134 NETWORK ADDRESS
135 BAUD RATE
136 PARITY/STOP BITS
137 ADDRESSING MODE
138 ADDR MODE TEST1
139 ADDR MODE TEST2
TXD+ 21
TXD− 22
RXD+ 23
RXD− 24
25
OUTPUTS
90 SOURCE
92 ON THRESHOLD
94 OFF THRESHOLD
96 INVERT
98 STATUS
DIG OUT 1
26
91 SOURCE
93 ON THRESHOLD
95 OFF THRESHOLD
97 INVERT
99 STATUS
DIG OUT 2
27
28
108 MODE
109 FULL SCALE VOLTAGE
111 SOURCE
114 GAIN
117 BIAS
126 FORCE FULL
120 STATUS
123 VOLTAGE
ANALOG OUTPUT 1
VOLTAGE OUT 1
29
30
110 FULL SCALE VOLTAGE
112 SOURCE
115 GAIN
118 BIAS
127 FORCE FULL
121 STATUS
124 VOLTAGE
ANALOG OUTPUT 2
VOLTAGE OUT 2
31
32
113 SOURCE
116 GAIN
119 BIAS
128 FORCE FULL
122 STATUS
125 VOLTAGE
ANALOG OUTPUT 3
VOLTAGE OUT 3
33
34
V TO I
CURRENT OUT 1
35
36
V TO I
CURRENT OUT 2
37
38
DRAWN BY: BKP
DATE: 10/22/08
APPROVED BY:
DATE:
CAROTRON
Driven by Excellence
HEATH SPRINGS, SC
TEL 803-286-9616
FAX 803-286-6063
TITLE: MICROMANAGER MM3000-CTCW SOFTWARE BLOCK DIAGRAMS
SCALE:
DRAWING NUMBER D13539
REV. A
SH. 3 OF 13

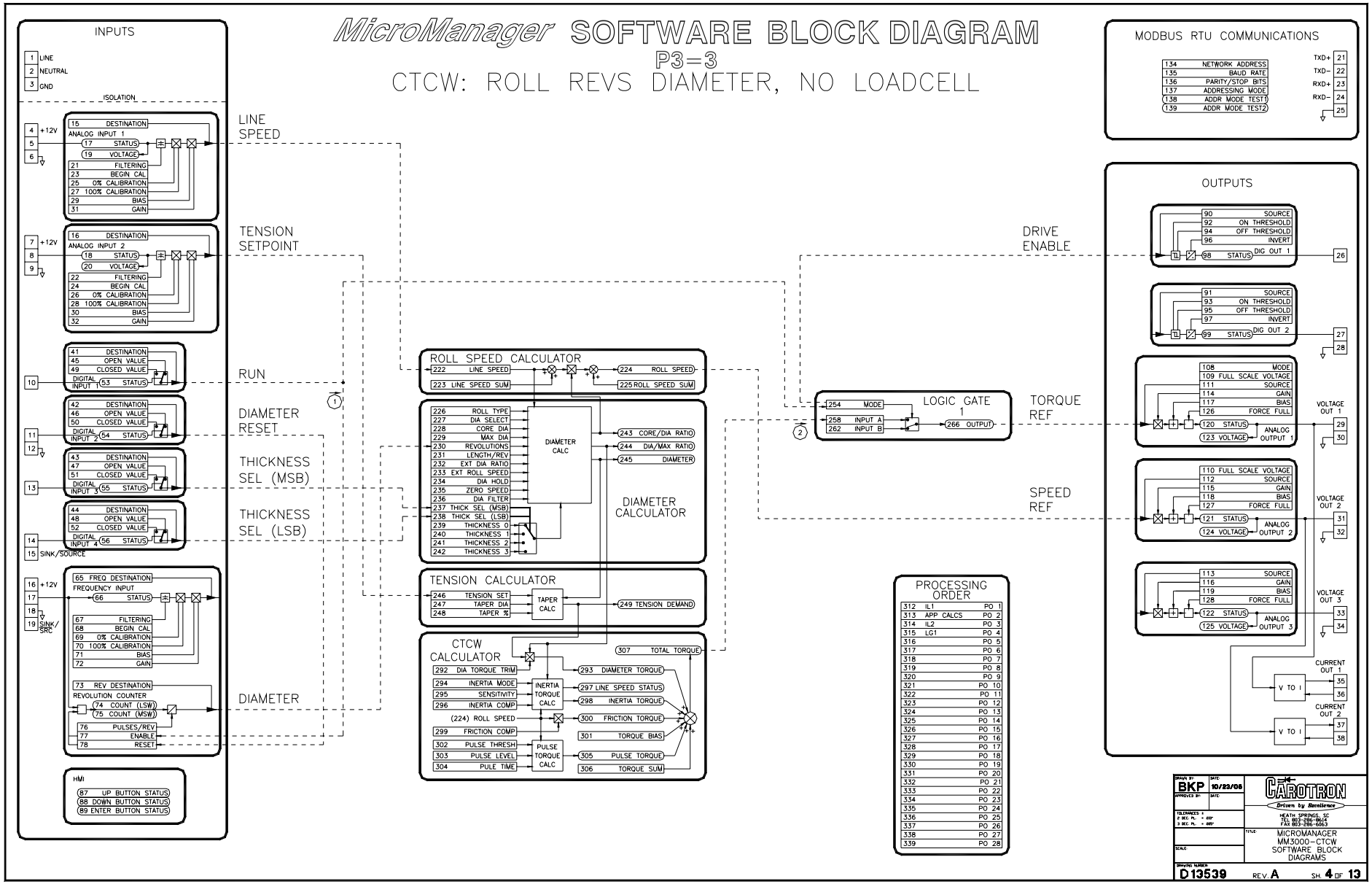
MicroManager SOFTWARE BLOCK DIAGRAM
P3=3
CTCW: ROLL REVS DIAMETER, NO LOADCELL
INPUTS
1 LINE
2 NEUTRAL
3 GND
ISOLATION
LINE SPEED
TENSION SETPOINT
RUN
DIAMETER RESET
THICKNESS SEL (MSB)
THICKNESS SEL (LSB)
DIAMETER
HMI
87 UP BUTTON STATUS
88 DOWN BUTTON STATUS
89 ENTER BUTTON STATUS
ROLL SPEED CALCULATOR
DIAMETER CALCULATOR
TENSION CALCULATOR
CTCW CALCULATOR
LOGIC GATE 1
DRIVE ENABLE
TORQUE REF
SPEED REF
PROCESSING ORDER
MODBUS RTU COMMUNICATIONS
134 NETWORK ADDRESS
135 BAUD RATE
136 PARITY/STOP BITS
137 ADDRESSING MODE
138 ADDR MODE TEST1
139 ADDR MODE TEST2
TXD+ 21
TXD- 22
RXD+ 23
RXD- 24
25
OUTPUTS
DIG OUT 1
DIG OUT 2
ANALOG OUTPUT 1
ANALOG OUTPUT 2
ANALOG OUTPUT 3
VOLTAGE OUT 1
VOLTAGE OUT 2
VOLTAGE OUT 3
CURRENT OUT 1
CURRENT OUT 2
V TO I
BKP
10/23/08
CAROTRON
Driven by Excellence
HEATH SPRINGS, SC
TEL 803-286-9614
FAX 803-286-6063
MICROMANAGER
MM3000-CTCW
SOFTWARE BLOCK
DIAGRAMS
D13539
REV. A
SH. 4 OF 13

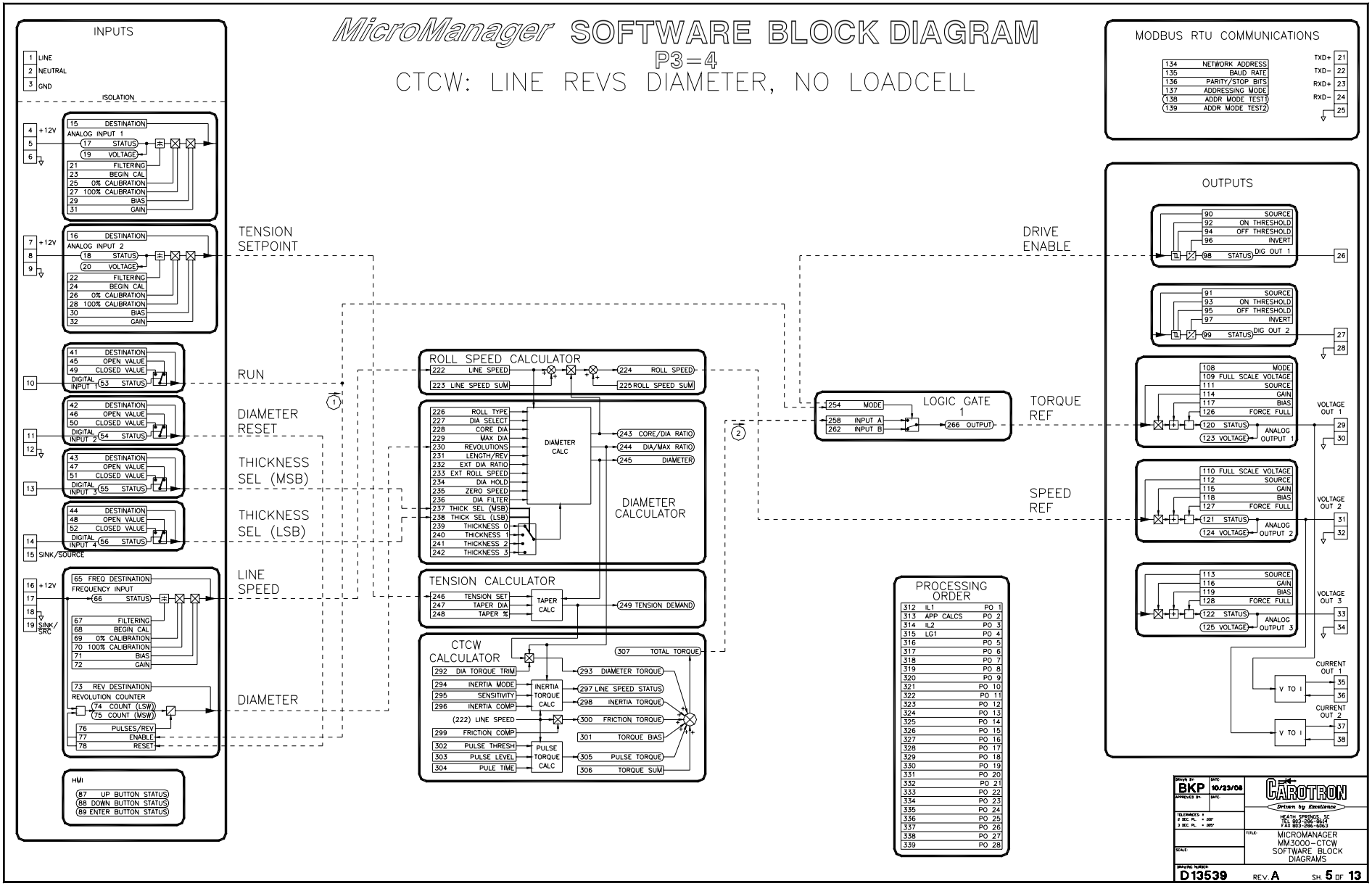
MicroManager SOFTWARE BLOCK DIAGRAM
P3=4
CTCW: LINE REVS DIAMETER, NO LOADCELL
INPUTS
1 LINE
2 NEUTRAL
3 GND
ISOLATION
4 +12V
5
6
15 DESTINATION
ANALOG INPUT 1
17 STATUS
19 VOLTAGE
21 FILTERING
23 BEGIN CAL
25 0% CALIBRATION
27 100% CALIBRATION
29 BIAS
31 GAIN
7 +12V
8
9
16 DESTINATION
ANALOG INPUT 2
18 STATUS
20 VOLTAGE
22 FILTERING
24 BEGIN CAL
26 0% CALIBRATION
28 100% CALIBRATION
30 BIAS
32 GAIN
10
41 DESTINATION
45 OPEN VALUE
49 CLOSED VALUE
DIGITAL INPUT 1
53 STATUS
11
12
42 DESTINATION
46 OPEN VALUE
50 CLOSED VALUE
DIGITAL INPUT 2
54 STATUS
13
43 DESTINATION
47 OPEN VALUE
51 CLOSED VALUE
DIGITAL INPUT 3
55 STATUS
14
44 DESTINATION
48 OPEN VALUE
52 CLOSED VALUE
DIGITAL INPUT 4
56 STATUS
15 SINK/SOURCE
16 +12V
17
18
19 SINK/SRC
65 FREQ DESTINATION
FREQUENCY INPUT
66 STATUS
67 FILTERING
68 BEGIN CAL
69 0% CALIBRATION
70 100% CALIBRATION
71 BIAS
72 GAIN
73 REV DESTINATION
REVOLUTION COUNTER
74 COUNT (LSW)
75 COUNT (MSW)
76 PULSES/REV
77 ENABLE
78 RESET
HMI
87 UP BUTTON STATUS
88 DOWN BUTTON STATUS
89 ENTER BUTTON STATUS
TENSION SETPOINT
RUN
DIAMETER RESET
THICKNESS SEL (MSB)
THICKNESS SEL (LSB)
LINE SPEED
DIAMETER
ROLL SPEED CALCULATOR
222 LINE SPEED
223 LINE SPEED SUM
224 ROLL SPEED
225 ROLL SPEED SUM
226 ROLL TYPE
227 DIA SELECT
228 CORE DIA
229 MAX DIA
230 REVOLUTIONS
231 LENGTH/REV
232 EXT DIA RATIO
233 EXT ROLL SPEED
234 DIA HOLD
235 ZERO SPEED
236 DIA FILTER
237 THICK SEL (MSB)
238 THICK SEL (LSB)
239 THICKNESS 0
240 THICKNESS 1
241 THICKNESS 2
242 THICKNESS 3
DIAMETER CALC
243 CORE/DIA RATIO
244 DIA/MAX RATIO
245 DIAMETER
DIAMETER CALCULATOR
TENSION CALCULATOR
246 TENSION SET
247 TAPER DIA
248 TAPER %
TAPER CALC
249 TENSION DEMAND
CTCW CALCULATOR
292 DIA TORQUE TRIM
294 INERTIA MODE
295 SENSITIVITY
296 INERTIA COMP
(222) LINE SPEED
299 FRICTION COMP
302 PULSE THRESH
303 PULSE LEVEL
304 PULE TIME
INERTIA TORQUE CALC
PULSE TORQUE CALC
307 TOTAL TORQUE
293 DIAMETER TORQUE
297 LINE SPEED STATUS
298 INERTIA TORQUE
300 FRICTION TORQUE
301 TORQUE BIAS
305 PULSE TORQUE
306 TORQUE SUM
DRIVE ENABLE
254 MODE
258 INPUT A
262 INPUT B
LOGIC GATE 1
266 OUTPUT
TORQUE REF
SPEED REF
PROCESSING ORDER
312 IL1 PO 1
313 APP CALCS PO 2
314 IL2 PO 3
315 LG1 PO 4
316 PO 5
317 PO 6
318 PO 7
319 PO 8
320 PO 9
321 PO 10
322 PO 11
323 PO 12
324 PO 13
325 PO 14
326 PO 15
327 PO 16
328 PO 17
329 PO 18
330 PO 19
331 PO 20
332 PO 21
333 PO 22
334 PO 23
335 PO 24
336 PO 25
337 PO 26
338 PO 27
339 PO 28
MODBUS RTU COMMUNICATIONS
134 NETWORK ADDRESS
135 BAUD RATE
136 PARITY/STOP BITS
137 ADDRESSING MODE
138 ADDR MODE TEST1
139 ADDR MODE TEST2
TXD+ 21
TXD− 22
RXD+ 23
RXD− 24
25
OUTPUTS
90 SOURCE
92 ON THRESHOLD
94 OFF THRESHOLD
96 INVERT
98 STATUS
DIG OUT 1
26
91 SOURCE
93 ON THRESHOLD
95 OFF THRESHOLD
97 INVERT
99 STATUS
DIG OUT 2
27
28
108 MODE
109 FULL SCALE VOLTAGE
111 SOURCE
114 GAIN
117 BIAS
126 FORCE FULL
120 STATUS
123 VOLTAGE
ANALOG OUTPUT 1
VOLTAGE OUT 1
29
30
110 FULL SCALE VOLTAGE
112 SOURCE
115 GAIN
118 BIAS
127 FORCE FULL
121 STATUS
124 VOLTAGE
ANALOG OUTPUT 2
VOLTAGE OUT 2
31
32
113 SOURCE
116 GAIN
119 BIAS
128 FORCE FULL
122 STATUS
125 VOLTAGE
ANALOG OUTPUT 3
VOLTAGE OUT 3
33
34
V TO I
CURRENT OUT 1
35
36
V TO I
CURRENT OUT 2
37
38
DRAWN BY: BKP
DATE: 10/23/08
APPROVED BY:
DATE:
TOLERANCES: 2 DEC. PL. ± .02" 3 DEC. PL. ± .005"
SCALE:
CAROTRON
Driven by Excellence
HEATH SPRINGS, SC
TEL 803-286-8648
FAX 803-286-6063
TITLE: MICROMANAGER MM3000-CTCW SOFTWARE BLOCK DIAGRAMS
DRAWING NUMBER D13539
REV. A
SH. 5 OF 13

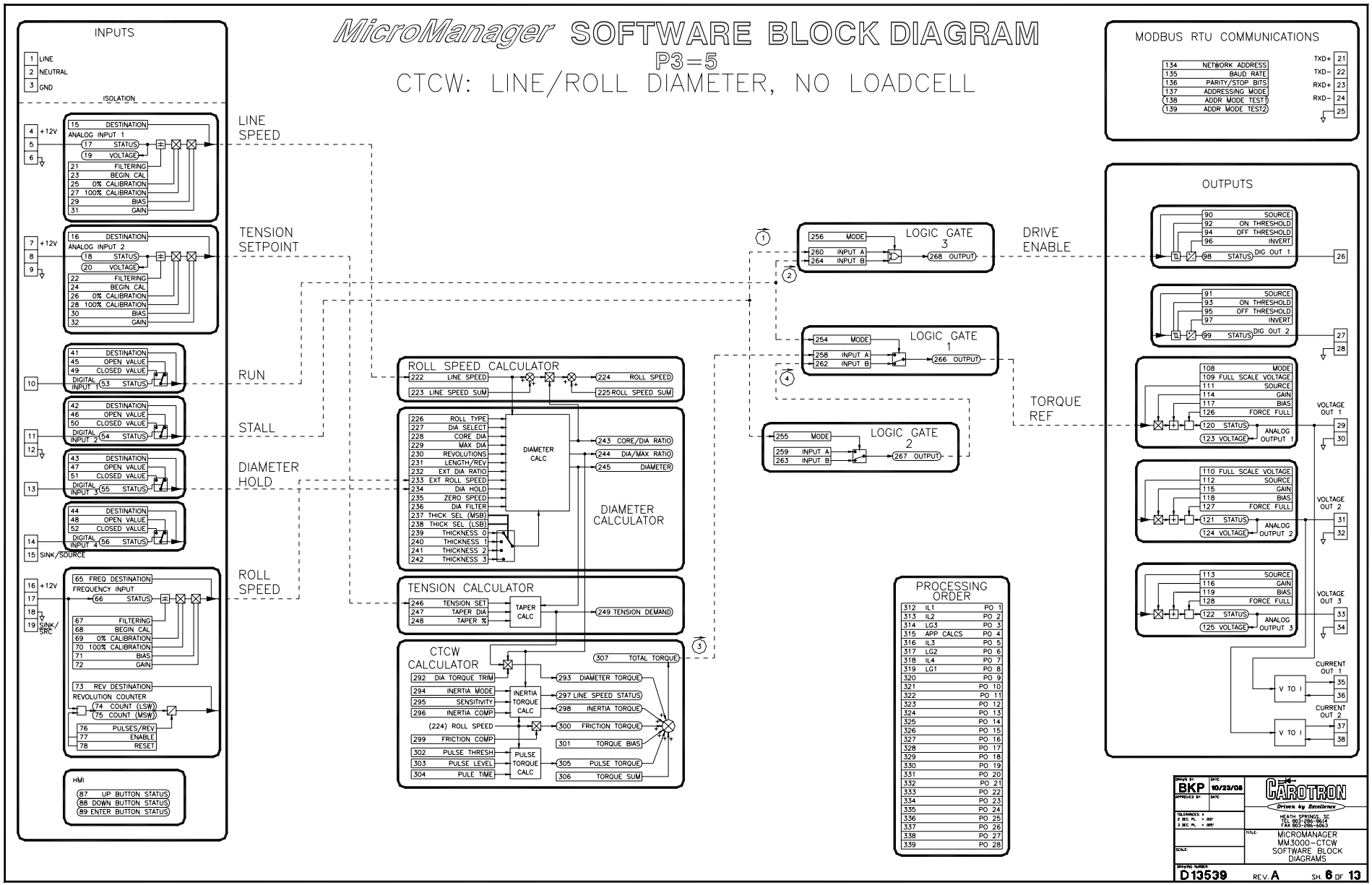
MicroManager SOFTWARE BLOCK DIAGRAM
P3=5
CTCW: LINE/ROLL DIAMETER, NO LOADCELL
INPUTS
1 LINE
2 NEUTRAL
3 GND
ISOLATION
4 +12V
5
6
15 DESTINATION
ANALOG INPUT 1
17 STATUS
19 VOLTAGE
21 FILTERING
23 BEGIN CAL
25 0% CALIBRATION
27 100% CALIBRATION
29 BIAS
31 GAIN
LINE SPEED
7 +12V
8
9
16 DESTINATION
ANALOG INPUT 2
18 STATUS
20 VOLTAGE
22 FILTERING
24 BEGIN CAL
26 0% CALIBRATION
28 100% CALIBRATION
30 BIAS
32 GAIN
TENSION SETPOINT
10
41 DESTINATION
45 OPEN VALUE
49 CLOSED VALUE
DIGITAL INPUT 1
53 STATUS
RUN
11
12
42 DESTINATION
46 OPEN VALUE
50 CLOSED VALUE
DIGITAL INPUT 2
54 STATUS
STALL
13
43 DESTINATION
47 OPEN VALUE
51 CLOSED VALUE
DIGITAL INPUT 3
55 STATUS
DIAMETER HOLD
14
15 SINK/SOURCE
44 DESTINATION
48 OPEN VALUE
52 CLOSED VALUE
DIGITAL INPUT 4
56 STATUS
16 +12V
17
18
19 SINK/SRC
65 FREQ DESTINATION
FREQUENCY INPUT
66 STATUS
67 FILTERING
68 BEGIN CAL
69 0% CALIBRATION
70 100% CALIBRATION
71 BIAS
72 GAIN
73 REV DESTINATION
REVOLUTION COUNTER
74 COUNT (LSW)
75 COUNT (MSW)
76 PULSES/REV
77 ENABLE
78 RESET
ROLL SPEED
HMI
87 UP BUTTON STATUS
88 DOWN BUTTON STATUS
89 ENTER BUTTON STATUS
ROLL SPEED CALCULATOR
222 LINE SPEED
223 LINE SPEED SUM
224 ROLL SPEED
225 ROLL SPEED SUM
DIAMETER CALCULATOR
226 ROLL TYPE
227 DIA SELECT
228 CORE DIA
229 MAX DIA
230 REVOLUTIONS
231 LENGTH/REV
232 EXT DIA RATIO
233 EXT ROLL SPEED
234 DIA HOLD
235 ZERO SPEED
236 DIA FILTER
237 THICK SEL (MSB)
238 THICK SEL (LSB)
239 THICKNESS 0
240 THICKNESS 1
241 THICKNESS 2
242 THICKNESS 3
DIAMETER CALC
243 CORE/DIA RATIO
244 DIA/MAX RATIO
245 DIAMETER
TENSION CALCULATOR
246 TENSION SET
247 TAPER DIA
248 TAPER %
TAPER CALC
249 TENSION DEMAND
CTCW CALCULATOR
292 DIA TORQUE TRIM
294 INERTIA MODE
295 SENSITIVITY
296 INERTIA COMP
(224) ROLL SPEED
299 FRICTION COMP
302 PULSE THRESH
303 PULSE LEVEL
304 PULE TIME
INERTIA TORQUE CALC
PULSE TORQUE CALC
293 DIAMETER TORQUE
297 LINE SPEED STATUS
298 INERTIA TORQUE
300 FRICTION TORQUE
301 TORQUE BIAS
305 PULSE TORQUE
306 TORQUE SUM
307 TOTAL TORQUE
LOGIC GATE 3
256 MODE
260 INPUT A
264 INPUT B
268 OUTPUT
DRIVE ENABLE
LOGIC GATE 1
254 MODE
258 INPUT A
262 INPUT B
266 OUTPUT
LOGIC GATE 2
255 MODE
259 INPUT A
263 INPUT B
267 OUTPUT
TORQUE REF
PROCESSING ORDER
312 IL1 PO 1
313 IL2 PO 2
314 LG3 PO 3
315 APP CALCS PO 4
316 IL3 PO 5
317 LG2 PO 6
318 IL4 PO 7
319 LG1 PO 8
320 PO 9
321 PO 10
322 PO 11
323 PO 12
324 PO 13
325 PO 14
326 PO 15
327 PO 16
328 PO 17
329 PO 18
330 PO 19
331 PO 20
332 PO 21
333 PO 22
334 PO 23
335 PO 24
336 PO 25
337 PO 26
338 PO 27
339 PO 28
MODBUS RTU COMMUNICATIONS
134 NETWORK ADDRESS
135 BAUD RATE
136 PARITY/STOP BITS
137 ADDRESSING MODE
138 ADDR MODE TEST1
139 ADDR MODE TEST2
TXD+ 21
TXD- 22
RXD+ 23
RXD- 24
25
OUTPUTS
90 SOURCE
92 ON THRESHOLD
94 OFF THRESHOLD
96 INVERT
98 STATUS
DIG OUT 1
26
91 SOURCE
93 ON THRESHOLD
95 OFF THRESHOLD
97 INVERT
99 STATUS
DIG OUT 2
27
28
108 MODE
109 FULL SCALE VOLTAGE
111 SOURCE
114 GAIN
117 BIAS
126 FORCE FULL
120 STATUS
123 VOLTAGE
ANALOG OUTPUT 1
VOLTAGE OUT 1
29
30
110 FULL SCALE VOLTAGE
112 SOURCE
115 GAIN
118 BIAS
127 FORCE FULL
121 STATUS
124 VOLTAGE
ANALOG OUTPUT 2
VOLTAGE OUT 2
31
32
113 SOURCE
116 GAIN
119 BIAS
128 FORCE FULL
122 STATUS
125 VOLTAGE
ANALOG OUTPUT 3
VOLTAGE OUT 3
33
34
V TO I
CURRENT OUT 1
35
36
V TO I
CURRENT OUT 2
37
38
DRAWN BY: BKP
DATE: 10/23/08
APPROVED BY:
DATE:
TOLERANCES
2 DEC PL. ± .02"
3 DEC PL. ± .005"
SCALE:
CAROTRON
Driven by Excellence
HEATH SPRINGS, SC
PH 803-286-8844
FAX 803-286-8864
TITLE:
MICROMANAGER
MM3000-CTCW
SOFTWARE BLOCK
DIAGRAMS
DRAWING NUMBER
D13539
REV. A
SH. 6 OF 13

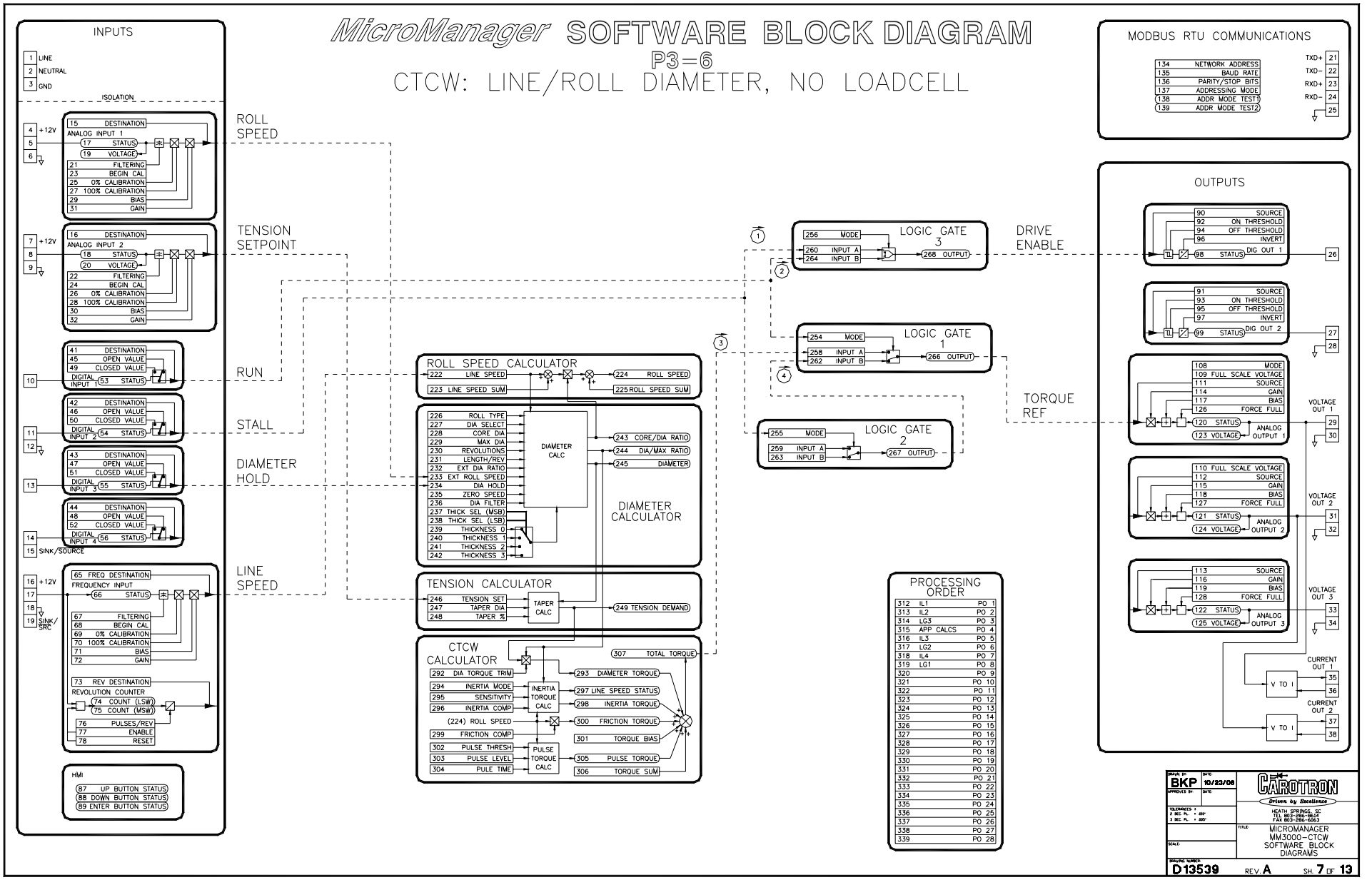
MicroManager SOFTWARE BLOCK DIAGRAM
P3=6
CTCW: LINE/ROLL DIAMETER, NO LOADCELL
INPUTS
1 LINE
2 NEUTRAL
3 GND
ISOLATION
4 +12V
5
6
15 DESTINATION
ANALOG INPUT 1
17 STATUS
19 VOLTAGE
21 FILTERING
23 BEGIN CAL
25 0% CALIBRATION
27 100% CALIBRATION
29 BIAS
31 GAIN
ROLL SPEED
7 +12V
8
9
16 DESTINATION
ANALOG INPUT 2
18 STATUS
20 VOLTAGE
22 FILTERING
24 BEGIN CAL
26 0% CALIBRATION
28 100% CALIBRATION
30 BIAS
32 GAIN
TENSION SETPOINT
10
41 DESTINATION
45 OPEN VALUE
49 CLOSED VALUE
DIGITAL INPUT 1
53 STATUS
RUN
11
12
42 DESTINATION
46 OPEN VALUE
50 CLOSED VALUE
DIGITAL INPUT 2
54 STATUS
STALL
13
43 DESTINATION
47 OPEN VALUE
51 CLOSED VALUE
DIGITAL INPUT 3
55 STATUS
DIAMETER HOLD
14
44 DESTINATION
48 OPEN VALUE
52 CLOSED VALUE
DIGITAL INPUT 4
56 STATUS
15 SINK/SOURCE
16 +12V
17
18
19 SINK/SRC
65 FREQ DESTINATION
FREQUENCY INPUT
66 STATUS
67 FILTERING
68 BEGIN CAL
69 0% CALIBRATION
70 100% CALIBRATION
71 BIAS
72 GAIN
LINE SPEED
73 REV DESTINATION
REVOLUTION COUNTER
74 COUNT (LSW)
75 COUNT (MSW)
76 PULSES/REV
77 ENABLE
78 RESET
HMI
87 UP BUTTON STATUS
88 DOWN BUTTON STATUS
89 ENTER BUTTON STATUS
ROLL SPEED CALCULATOR
222 LINE SPEED
223 LINE SPEED SUM
224 ROLL SPEED
225 ROLL SPEED SUM
226 ROLL TYPE
227 DIA SELECT
228 CORE DIA
229 MAX DIA
230 REVOLUTIONS
231 LENGTH/REV
232 EXT DIA RATIO
233 EXT ROLL SPEED
234 DIA HOLD
235 ZERO SPEED
236 DIA FILTER
237 THICK SEL (MSB)
238 THICK SEL (LSB)
239 THICKNESS 0
240 THICKNESS 1
241 THICKNESS 2
242 THICKNESS 3
DIAMETER CALC
243 CORE/DIA RATIO
244 DIA/MAX RATIO
245 DIAMETER
DIAMETER CALCULATOR
TENSION CALCULATOR
246 TENSION SET
247 TAPER DIA
248 TAPER %
TAPER CALC
249 TENSION DEMAND
CTCW CALCULATOR
292 DIA TORQUE TRIM
294 INERTIA MODE
295 SENSITIVITY
296 INERTIA COMP
INERTIA TORQUE CALC
293 DIAMETER TORQUE
297 LINE SPEED STATUS
298 INERTIA TORQUE
(224) ROLL SPEED
299 FRICTION COMP
300 FRICTION TORQUE
301 TORQUE BIAS
302 PULSE THRESH
303 PULSE LEVEL
304 PULE TIME
PULSE TORQUE CALC
305 PULSE TORQUE
306 TORQUE SUM
307 TOTAL TORQUE
1
2
3
4
256 MODE
260 INPUT A
264 INPUT B
LOGIC GATE 3
268 OUTPUT
DRIVE ENABLE
254 MODE
258 INPUT A
262 INPUT B
LOGIC GATE 1
266 OUTPUT
255 MODE
259 INPUT A
263 INPUT B
LOGIC GATE 2
267 OUTPUT
TORQUE REF
PROCESSING ORDER
312 IL1 PO 1
313 IL2 PO 2
314 LG3 PO 3
315 APP CALCS PO 4
316 IL3 PO 5
317 LG2 PO 6
318 IL4 PO 7
319 LG1 PO 8
320 PO 9
321 PO 10
322 PO 11
323 PO 12
324 PO 13
325 PO 14
326 PO 15
327 PO 16
328 PO 17
329 PO 18
330 PO 19
331 PO 20
332 PO 21
333 PO 22
334 PO 23
335 PO 24
336 PO 25
337 PO 26
338 PO 27
339 PO 28
MODBUS RTU COMMUNICATIONS
134 NETWORK ADDRESS
135 BAUD RATE
136 PARITY/STOP BITS
137 ADDRESSING MODE
138 ADDR MODE TEST1
139 ADDR MODE TEST2
TXD+ 21
TXD- 22
RXD+ 23
RXD- 24
25
OUTPUTS
90 SOURCE
92 ON THRESHOLD
94 OFF THRESHOLD
96 INVERT
98 STATUS
DIG OUT 1
26
91 SOURCE
93 ON THRESHOLD
95 OFF THRESHOLD
97 INVERT
99 STATUS
DIG OUT 2
27
28
108 MODE
109 FULL SCALE VOLTAGE
111 SOURCE
114 GAIN
117 BIAS
126 FORCE FULL
120 STATUS
123 VOLTAGE
ANALOG OUTPUT 1
VOLTAGE OUT 1
29
30
110 FULL SCALE VOLTAGE
112 SOURCE
115 GAIN
118 BIAS
127 FORCE FULL
121 STATUS
124 VOLTAGE
ANALOG OUTPUT 2
VOLTAGE OUT 2
31
32
113 SOURCE
116 GAIN
119 BIAS
128 FORCE FULL
122 STATUS
125 VOLTAGE
ANALOG OUTPUT 3
VOLTAGE OUT 3
33
34
V TO I
CURRENT OUT 1
35
36
V TO I
CURRENT OUT 2
37
38
DRAWN BY: BKP
DATE: 10/23/08
APPROVED BY:
DATE:
TOLERANCES: X DEC PL. ± .05" 3 DEC PL. ± .005"
SCALE:
CAROTRON
Driven by Excellence
HEATH SPRINGS, SC
TEL 803-286-8414
FAX 803-286-6063
TITLE: MICROMANAGER MM3000-CTCW SOFTWARE BLOCK DIAGRAMS
DRAWING NUMBER: D13539
REV. A
SH. 7 OF 13

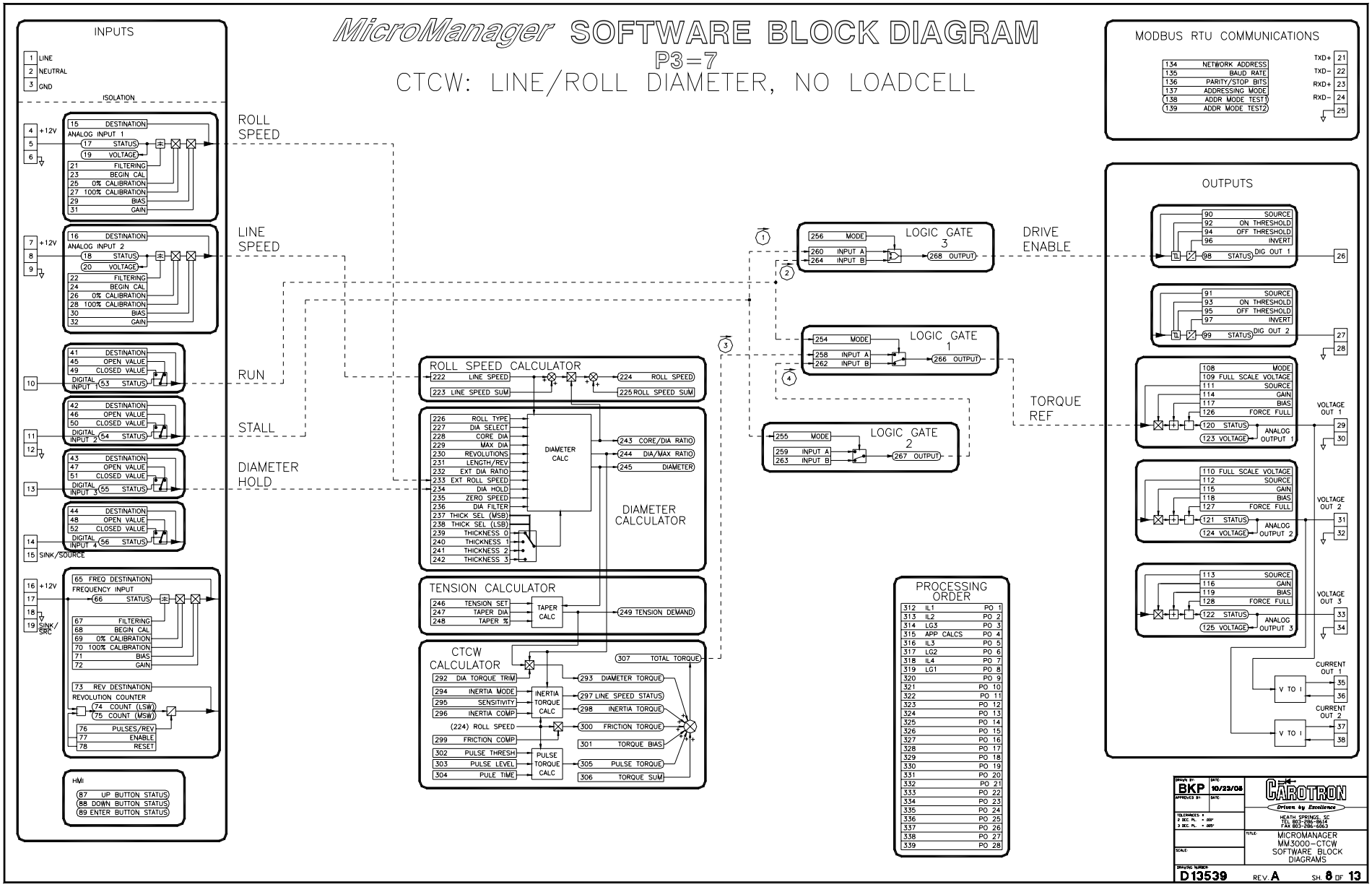
MicroManager SOFTWARE BLOCK DIAGRAM
P3=7
CTCW: LINE/ROLL DIAMETER, NO LOADCELL
INPUTS
1 LINE
2 NEUTRAL
3 GND
ISOLATION
4 +12V
5
6
15 DESTINATION
ANALOG INPUT 1
17 STATUS
19 VOLTAGE
21 FILTERING
23 BEGIN CAL
25 0% CALIBRATION
27 100% CALIBRATION
29 BIAS
31 GAIN
ROLL SPEED
7 +12V
8
9
16 DESTINATION
ANALOG INPUT 2
18 STATUS
20 VOLTAGE
22 FILTERING
24 BEGIN CAL
26 0% CALIBRATION
28 100% CALIBRATION
30 BIAS
32 GAIN
LINE SPEED
10
41 DESTINATION
45 OPEN VALUE
49 CLOSED VALUE
DIGITAL INPUT 1
53 STATUS
RUN
11
12
42 DESTINATION
46 OPEN VALUE
50 CLOSED VALUE
DIGITAL INPUT 2
54 STATUS
STALL
13
43 DESTINATION
47 OPEN VALUE
51 CLOSED VALUE
DIGITAL INPUT 3
55 STATUS
DIAMETER HOLD
14
44 DESTINATION
48 OPEN VALUE
52 CLOSED VALUE
DIGITAL INPUT 4
56 STATUS
15 SINK/SOURCE
16 +12V
17
18
19 SINK/SRC
65 FREQ DESTINATION
FREQUENCY INPUT
66 STATUS
67 FILTERING
68 BEGIN CAL
69 0% CALIBRATION
70 100% CALIBRATION
71 BIAS
72 GAIN
73 REV DESTINATION
REVOLUTION COUNTER
74 COUNT (LSW)
75 COUNT (MSW)
76 PULSES/REV
77 ENABLE
78 RESET
HMI
87 UP BUTTON STATUS
88 DOWN BUTTON STATUS
89 ENTER BUTTON STATUS
ROLL SPEED CALCULATOR
222 LINE SPEED
223 LINE SPEED SUM
224 ROLL SPEED
225 ROLL SPEED SUM
226 ROLL TYPE
227 DIA SELECT
228 CORE DIA
229 MAX DIA
230 REVOLUTIONS
231 LENGTH/REV
232 EXT DIA RATIO
233 EXT ROLL SPEED
234 DIA HOLD
235 ZERO SPEED
236 DIA FILTER
237 THICK SEL (MSB)
238 THICK SEL (LSB)
239 THICKNESS 0
240 THICKNESS 1
241 THICKNESS 2
242 THICKNESS 3
DIAMETER CALC
243 CORE/DIA RATIO
244 DIA/MAX RATIO
245 DIAMETER
DIAMETER CALCULATOR
TENSION CALCULATOR
246 TENSION SET
247 TAPER DIA
248 TAPER %
TAPER CALC
249 TENSION DEMAND
CTCW CALCULATOR
292 DIA TORQUE TRIM
294 INERTIA MODE
295 SENSITIVITY
296 INERTIA COMP
(224) ROLL SPEED
299 FRICTION COMP
302 PULSE THRESH
303 PULSE LEVEL
304 PULE TIME
INERTIA TORQUE CALC
PULSE TORQUE CALC
307 TOTAL TORQUE
293 DIAMETER TORQUE
297 LINE SPEED STATUS
298 INERTIA TORQUE
300 FRICTION TORQUE
301 TORQUE BIAS
305 PULSE TORQUE
306 TORQUE SUM
LOGIC GATE 3
256 MODE
260 INPUT A
264 INPUT B
268 OUTPUT
DRIVE ENABLE
LOGIC GATE 1
254 MODE
258 INPUT A
262 INPUT B
266 OUTPUT
LOGIC GATE 2
255 MODE
259 INPUT A
263 INPUT B
267 OUTPUT
TORQUE REF
PROCESSING ORDER
312 IL1 PO 1
313 IL2 PO 2
314 LG3 PO 3
315 APP CALCS PO 4
316 IL3 PO 5
317 LG2 PO 6
318 IL4 PO 7
319 LG1 PO 8
320 PO 9
321 PO 10
322 PO 11
323 PO 12
324 PO 13
325 PO 14
326 PO 15
327 PO 16
328 PO 17
329 PO 18
330 PO 19
331 PO 20
332 PO 21
333 PO 22
334 PO 23
335 PO 24
336 PO 25
337 PO 26
338 PO 27
339 PO 28
MODBUS RTU COMMUNICATIONS
134 NETWORK ADDRESS
135 BAUD RATE
136 PARITY/STOP BITS
137 ADDRESSING MODE
138 ADDR MODE TEST1
139 ADDR MODE TEST2
TXD+ 21
TXD- 22
RXD+ 23
RXD- 24
25
OUTPUTS
90 SOURCE
92 ON THRESHOLD
94 OFF THRESHOLD
96 INVERT
98 STATUS
DIG OUT 1
26
91 SOURCE
93 ON THRESHOLD
95 OFF THRESHOLD
97 INVERT
99 STATUS
DIG OUT 2
27
28
108 MODE
109 FULL SCALE VOLTAGE
111 SOURCE
114 GAIN
117 BIAS
126 FORCE FULL
120 STATUS
123 VOLTAGE
ANALOG OUTPUT 1
VOLTAGE OUT 1
29
30
110 FULL SCALE VOLTAGE
112 SOURCE
115 GAIN
118 BIAS
127 FORCE FULL
121 STATUS
124 VOLTAGE
ANALOG OUTPUT 2
VOLTAGE OUT 2
31
32
113 SOURCE
116 GAIN
119 BIAS
128 FORCE FULL
122 STATUS
125 VOLTAGE
ANALOG OUTPUT 3
VOLTAGE OUT 3
33
34
CURRENT OUT 1
V TO I
35
36
CURRENT OUT 2
V TO I
37
38
DRAWN BY: BKP
DATE: 10/23/08
APPROVED BY:
DATE:
TOLERANCES: X DEC PL. ± .05" X DEC PL. ± .005"
CAROTRON
Driven by Excellence
HEATH SPRINGS, SC
TEL 803-286-8616
FAX 803-286-6063
TITLE:
MICROMANAGER MM3000-CTCW SOFTWARE BLOCK DIAGRAMS
SCALE:
DRAWING NUMBER
D13539
REV. A
SH. 8 OF 13

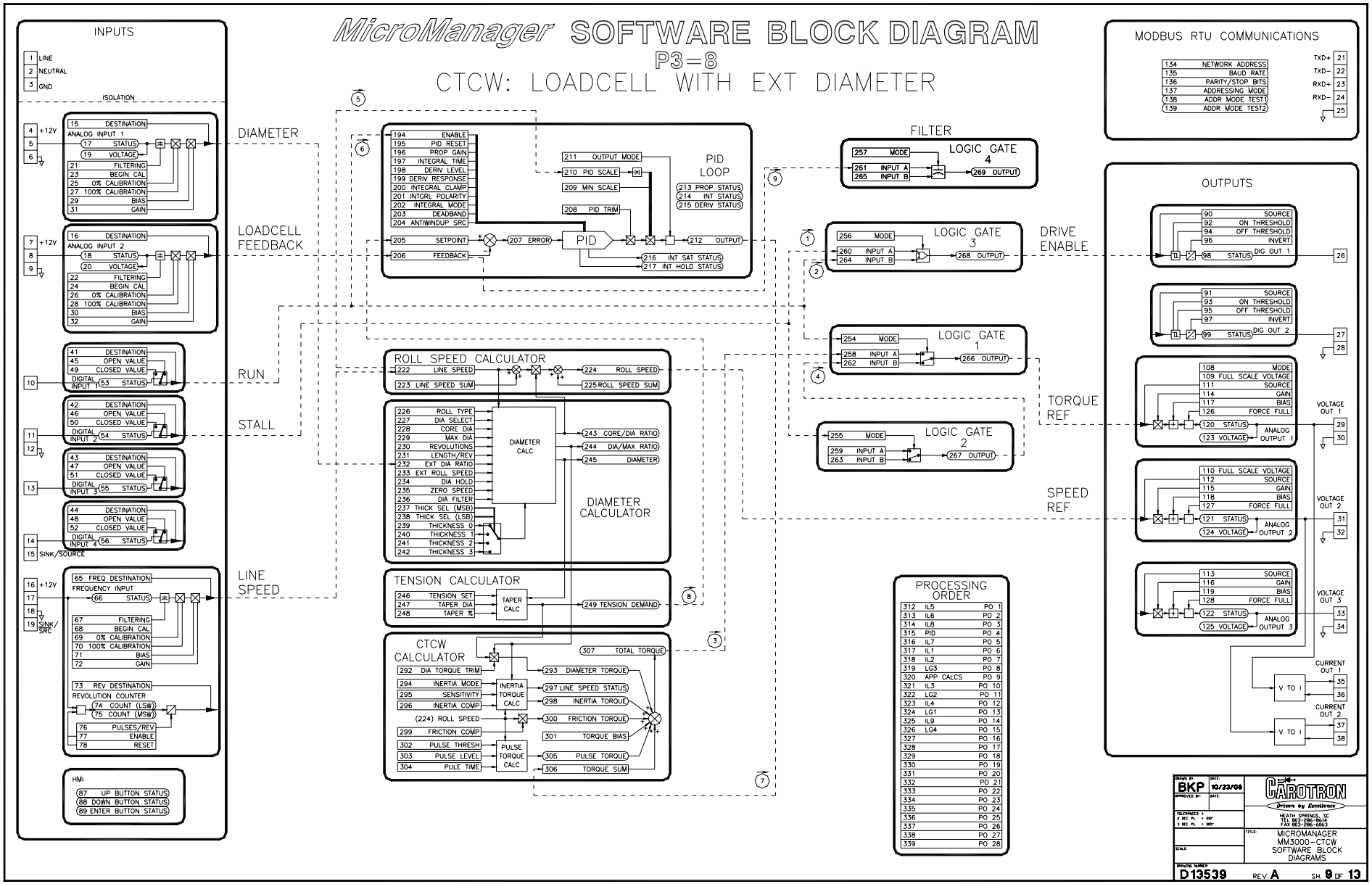
MicroManager SOFTWARE BLOCK DIAGRAM
P3=8
CTCW: LOADCELL WITH EXT DIAMETER
INPUTS
1 LINE
2 NEUTRAL
3 GND
ISOLATION
DIAMETER
LOADCELL FEEDBACK
RUN
STALL
LINE SPEED
ANALOG INPUT 1
ANALOG INPUT 2
DIGITAL INPUT 1
DIGITAL INPUT 2
DIGITAL INPUT 3
DIGITAL INPUT 4
SINK/SOURCE
FREQUENCY INPUT
REVOLUTION COUNTER
HMI
87 UP BUTTON STATUS
88 DOWN BUTTON STATUS
89 ENTER BUTTON STATUS
PID LOOP
PID
ROLL SPEED CALCULATOR
DIAMETER CALC
DIAMETER CALCULATOR
TENSION CALCULATOR
TAPER CALC
CTCW CALCULATOR
INERTIA TORQUE CALC
PULSE TORQUE CALC
FILTER
LOGIC GATE 4
LOGIC GATE 3
LOGIC GATE 1
LOGIC GATE 2
DRIVE ENABLE
TORQUE REF
SPEED REF
PROCESSING ORDER
MODBUS RTU COMMUNICATIONS
134 NETWORK ADDRESS
135 BAUD RATE
136 PARITY/STOP BITS
137 ADDRESSING MODE
138 ADDR MODE TEST1
139 ADDR MODE TEST2
OUTPUTS
DIG OUT 1
DIG OUT 2
ANALOG OUTPUT 1
ANALOG OUTPUT 2
ANALOG OUTPUT 3
VOLTAGE OUT 1
VOLTAGE OUT 2
VOLTAGE OUT 3
CURRENT OUT 1
CURRENT OUT 2
V TO I
BKP
10/23/08
CAROTRON
Driven by Excellence
HEATH SPRINGS, SC
TEL 803-286-8614
FAX 803-286-6063
MICROMANAGER
MM3000-CTCW
SOFTWARE BLOCK
DIAGRAMS
D13539
REV. A
SH. 9 OF 13

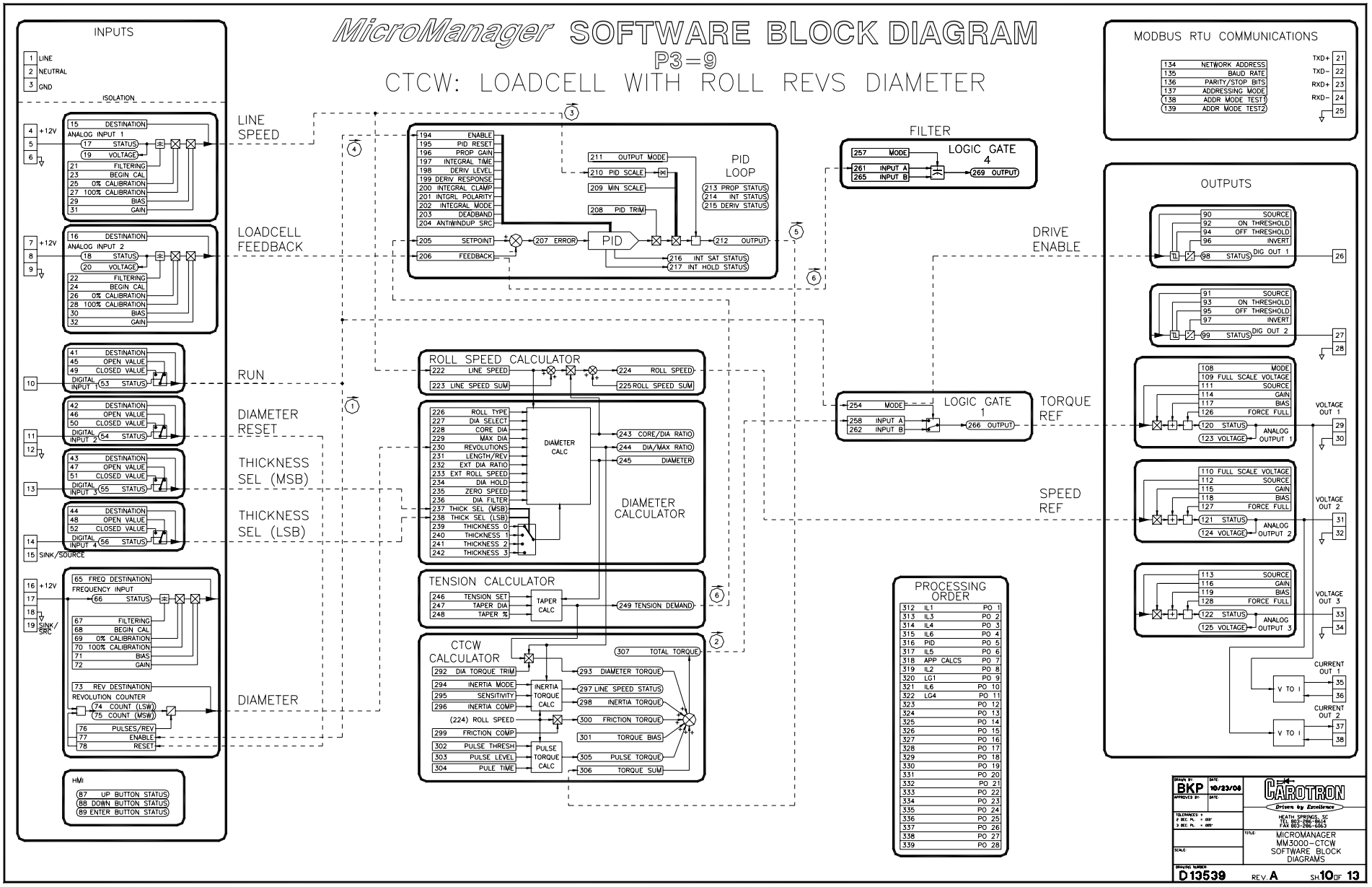
MicroManager SOFTWARE BLOCK DIAGRAM
P3=9
CTCW: LOADCELL WITH ROLL REVS DIAMETER
INPUTS
1 LINE
2 NEUTRAL
3 GND
ISOLATION
4 +12V
5
6
15 DESTINATION
ANALOG INPUT 1
17 STATUS
19 VOLTAGE
21 FILTERING
23 BEGIN CAL
25 0% CALIBRATION
27 100% CALIBRATION
29 BIAS
31 GAIN
7 +12V
8
9
16 DESTINATION
ANALOG INPUT 2
18 STATUS
20 VOLTAGE
22 FILTERING
24 BEGIN CAL
26 0% CALIBRATION
28 100% CALIBRATION
30 BIAS
32 GAIN
10
41 DESTINATION
45 OPEN VALUE
49 CLOSED VALUE
DIGITAL INPUT 1
63 STATUS
11
12
42 DESTINATION
46 OPEN VALUE
50 CLOSED VALUE
DIGITAL INPUT 2
64 STATUS
13
43 DESTINATION
47 OPEN VALUE
51 CLOSED VALUE
DIGITAL INPUT 3
65 STATUS
14
44 DESTINATION
48 OPEN VALUE
52 CLOSED VALUE
DIGITAL INPUT 4
66 STATUS
15 SINK/SOURCE
16 +12V
17
18
19 SINK/SRC
65 FREQ DESTINATION
FREQUENCY INPUT
66 STATUS
67 FILTERING
68 BEGIN CAL
69 0% CALIBRATION
70 100% CALIBRATION
71 BIAS
72 GAIN
73 REV DESTINATION
REVOLUTION COUNTER
74 COUNT (LSW)
75 COUNT (MSW)
76 PULSES/REV
77 ENABLE
78 RESET
HMI
87 UP BUTTON STATUS
88 DOWN BUTTON STATUS
89 ENTER BUTTON STATUS
LINE SPEED
LOADCELL FEEDBACK
RUN
DIAMETER RESET
THICKNESS SEL (MSB)
THICKNESS SEL (LSB)
DIAMETER
194 ENABLE
195 PID RESET
196 PROP GAIN
197 INTEGRAL TIME
198 DERIV LEVEL
199 DERIV RESPONSE
200 INTEGRAL CLAMP
201 INTGRL POLARITY
202 INTEGRAL MODE
203 DEADBAND
204 ANTIWINDUP SRC
205 SETPOINT
206 FEEDBACK
207 ERROR
PID
211 OUTPUT MODE
210 PID SCALE
209 MIN SCALE
208 PID TRIM
PID LOOP
213 PROP STATUS
214 INT STATUS
215 DERIV STATUS
212 OUTPUT
216 INT SAT STATUS
217 INT HOLD STATUS
FILTER
257 MODE
261 INPUT A
265 INPUT B
LOGIC GATE 4
269 OUTPUT
DRIVE ENABLE
254 MODE
258 INPUT A
262 INPUT B
LOGIC GATE 1
266 OUTPUT
TORQUE REF
SPEED REF
ROLL SPEED CALCULATOR
222 LINE SPEED
223 LINE SPEED SUM
224 ROLL SPEED
225 ROLL SPEED SUM
DIAMETER CALCULATOR
226 ROLL TYPE
227 DIA SELECT
228 CORE DIA
229 MAX DIA
230 REVOLUTIONS
231 LENGTH/REV
232 EXT DIA RATIO
233 EXT ROLL SPEED
234 DIA HOLD
235 ZERO SPEED
236 DIA FILTER
237 THICK SEL (MSB)
238 THICK SEL (LSB)
239 THICKNESS 0
240 THICKNESS 1
241 THICKNESS 2
242 THICKNESS 3
DIAMETER CALC
243 CORE/DIA RATIO
244 DIA/MAX RATIO
245 DIAMETER
TENSION CALCULATOR
246 TENSION SET
247 TAPER DIA
248 TAPER %
TAPER CALC
249 TENSION DEMAND
CTCW CALCULATOR
292 DIA TORQUE TRIM
294 INERTIA MODE
295 SENSITIVITY
296 INERTIA COMP
(224) ROLL SPEED
299 FRICTION COMP
302 PULSE THRESH
303 PULSE LEVEL
304 PULE TIME
INERTIA TORQUE CALC
PULSE TORQUE CALC
307 TOTAL TORQUE
293 DIAMETER TORQUE
297 LINE SPEED STATUS
298 INERTIA TORQUE
300 FRICTION TORQUE
301 TORQUE BIAS
305 PULSE TORQUE
306 TORQUE SUM
PROCESSING ORDER
312 IL1 PO 1
313 IL3 PO 2
314 IL4 PO 3
315 IL6 PO 4
316 PID PO 5
317 IL5 PO 6
318 APP CALCS PO 7
319 IL2 PO 8
320 LG1 PO 9
321 IL6 PO 10
322 LG4 PO 11
323 PO 12
324 PO 13
325 PO 14
326 PO 15
327 PO 16
328 PO 17
329 PO 18
330 PO 19
331 PO 20
332 PO 21
333 PO 22
334 PO 23
335 PO 24
336 PO 25
337 PO 26
338 PO 27
339 PO 28
MODBUS RTU COMMUNICATIONS
134 NETWORK ADDRESS
135 BAUD RATE
136 PARITY/STOP BITS
137 ADDRESSING MODE
138 ADDR MODE TEST1
139 ADDR MODE TEST2
TXD+ 21
TXD- 22
RXD+ 23
RXD- 24
25
OUTPUTS
90 SOURCE
92 ON THRESHOLD
94 OFF THRESHOLD
96 INVERT
98 STATUS
DIG OUT 1
26
91 SOURCE
93 ON THRESHOLD
95 OFF THRESHOLD
97 INVERT
99 STATUS
DIG OUT 2
27
28
108 MODE
109 FULL SCALE VOLTAGE
111 SOURCE
114 GAIN
117 BIAS
126 FORCE FULL
120 STATUS
123 VOLTAGE
ANALOG OUTPUT 1
VOLTAGE OUT 1
29
30
110 FULL SCALE VOLTAGE
112 SOURCE
115 GAIN
118 BIAS
127 FORCE FULL
121 STATUS
124 VOLTAGE
ANALOG OUTPUT 2
VOLTAGE OUT 2
31
32
113 SOURCE
116 GAIN
119 BIAS
128 FORCE FULL
122 STATUS
125 VOLTAGE
ANALOG OUTPUT 3
VOLTAGE OUT 3
33
34
V TO I
CURRENT OUT 1
35
36
V TO I
CURRENT OUT 2
37
38
DRAWN BY: BKP
DATE: 10/23/08
APPROVED BY:
DATE:
TOLERANCES: 2 DEC PL. ± .02" 3 DEC PL. ± .005"
SCALE:
DRAWING NUMBER: D13539
REV. A
SH 10 OF 13
CAROTRON
Driven by Excellence
HEATH SPRINGS, SC
TEL 803-286-8614
FAX 803-286-6063
TITLE: MICROMANAGER MM3000-CTCW SOFTWARE BLOCK DIAGRAMS

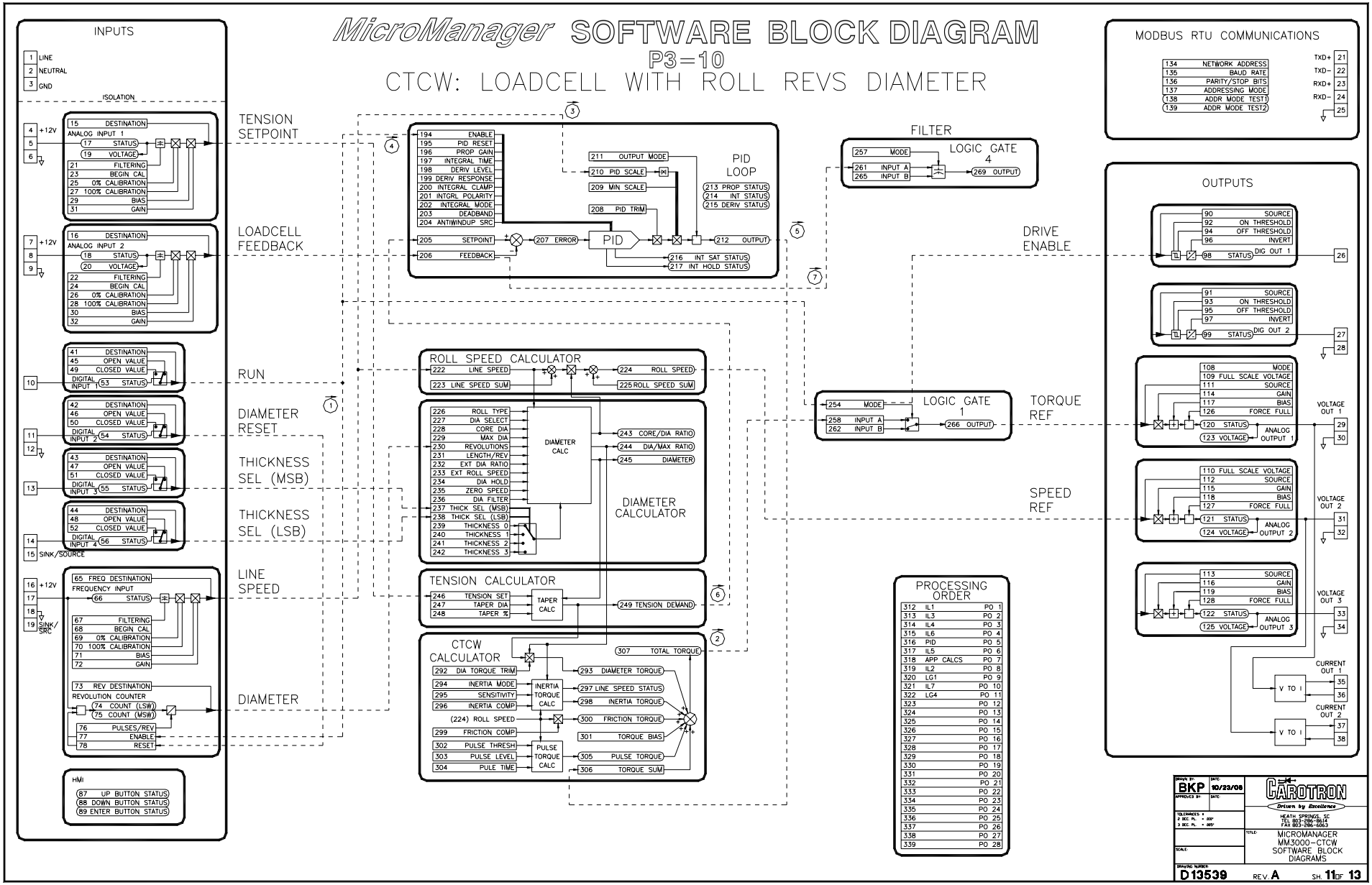
MicroManager SOFTWARE BLOCK DIAGRAM
P3=10
CTCW: LOADCELL WITH ROLL REVS DIAMETER
INPUTS
1 LINE
2 NEUTRAL
3 GND
ISOLATION
4 +12V
5
6
15 DESTINATION
ANALOG INPUT 1
17 STATUS
19 VOLTAGE
21 FILTERING
23 BEGIN CAL
25 0% CALIBRATION
27 100% CALIBRATION
29 BIAS
31 GAIN
TENSION SETPOINT
7 +12V
8
9
16 DESTINATION
ANALOG INPUT 2
18 STATUS
20 VOLTAGE
22 FILTERING
24 BEGIN CAL
26 0% CALIBRATION
28 100% CALIBRATION
30 BIAS
32 GAIN
LOADCELL FEEDBACK
10
41 DESTINATION
45 OPEN VALUE
49 CLOSED VALUE
DIGITAL INPUT 1
53 STATUS
RUN
11
12
42 DESTINATION
46 OPEN VALUE
50 CLOSED VALUE
DIGITAL INPUT 2
54 STATUS
DIAMETER RESET
13
43 DESTINATION
47 OPEN VALUE
51 CLOSED VALUE
DIGITAL INPUT 3
55 STATUS
THICKNESS SEL (MSB)
14
44 DESTINATION
48 OPEN VALUE
52 CLOSED VALUE
DIGITAL INPUT 4
56 STATUS
THICKNESS SEL (LSB)
15 SINK/SOURCE
16 +12V
17
18
19 SINK/SRC
65 FREQ DESTINATION
FREQUENCY INPUT
66 STATUS
67 FILTERING
68 BEGIN CAL
69 0% CALIBRATION
70 100% CALIBRATION
71 BIAS
72 GAIN
LINE SPEED
73 REV DESTINATION
REVOLUTION COUNTER
74 COUNT (LSW)
75 COUNT (MSW)
76 PULSES/REV
77 ENABLE
78 RESET
DIAMETER
HMI
87 UP BUTTON STATUS
88 DOWN BUTTON STATUS
89 ENTER BUTTON STATUS
194 ENABLE
195 PID RESET
196 PROP GAIN
197 INTEGRAL TIME
198 DERIV LEVEL
199 DERIV RESPONSE
200 INTEGRAL CLAMP
201 INTGRL POLARITY
202 INTEGRAL MODE
203 DEADBAND
204 ANTIWINDUP SRC
211 OUTPUT MODE
210 PID SCALE
209 MIN SCALE
208 PID TRIM
PID LOOP
213 PROP STATUS
214 INT STATUS
215 DERIV STATUS
205 SETPOINT
207 ERROR
PID
212 OUTPUT
206 FEEDBACK
216 INT SAT STATUS
217 INT HOLD STATUS
FILTER
257 MODE
LOGIC GATE 4
261 INPUT A
265 INPUT B
269 OUTPUT
DRIVE ENABLE
ROLL SPEED CALCULATOR
222 LINE SPEED
224 ROLL SPEED
223 LINE SPEED SUM
225 ROLL SPEED SUM
226 ROLL TYPE
227 DIA SELECT
228 CORE DIA
229 MAX DIA
230 REVOLUTIONS
231 LENGTH/REV
232 EXT DIA RATIO
233 EXT ROLL SPEED
234 DIA HOLD
235 ZERO SPEED
236 DIA FILTER
237 THICK SEL (MSB)
238 THICK SEL (LSB)
239 THICKNESS 0
240 THICKNESS 1
241 THICKNESS 2
242 THICKNESS 3
DIAMETER CALC
243 CORE/DIA RATIO
244 DIA/MAX RATIO
245 DIAMETER
DIAMETER CALCULATOR
254 MODE
LOGIC GATE 1
258 INPUT A
262 INPUT B
266 OUTPUT
TORQUE REF
SPEED REF
TENSION CALCULATOR
246 TENSION SET
247 TAPER DIA
248 TAPER %
TAPER CALC
249 TENSION DEMAND
CTCW CALCULATOR
307 TOTAL TORQUE
292 DIA TORQUE TRIM
293 DIAMETER TORQUE
294 INERTIA MODE
295 SENSITIVITY
296 INERTIA COMP
INERTIA TORQUE CALC
297 LINE SPEED STATUS
298 INERTIA TORQUE
(224) ROLL SPEED
300 FRICTION TORQUE
299 FRICTION COMP
301 TORQUE BIAS
302 PULSE THRESH
303 PULSE LEVEL
304 PULE TIME
PULSE TORQUE CALC
305 PULSE TORQUE
306 TORQUE SUM
PROCESSING ORDER
312 IL1 PO 1
313 IL3 PO 2
314 IL4 PO 3
315 IL6 PO 4
316 PID PO 5
317 IL5 PO 6
318 APP CALCS PO 7
319 IL2 PO 8
320 LG1 PO 9
321 IL7 PO 10
322 LG4 PO 11
323 PO 12
324 PO 13
325 PO 14
326 PO 15
327 PO 16
328 PO 17
329 PO 18
330 PO 19
331 PO 20
332 PO 21
333 PO 22
334 PO 23
335 PO 24
336 PO 25
337 PO 26
338 PO 27
339 PO 28
MODBUS RTU COMMUNICATIONS
134 NETWORK ADDRESS
135 BAUD RATE
136 PARITY/STOP BITS
137 ADDRESSING MODE
138 ADDR MODE TEST1
139 ADDR MODE TEST2
TXD+ 21
TXD− 22
RXD+ 23
RXD− 24
25
OUTPUTS
90 SOURCE
92 ON THRESHOLD
94 OFF THRESHOLD
96 INVERT
98 STATUS
DIG OUT 1
26
91 SOURCE
93 ON THRESHOLD
95 OFF THRESHOLD
97 INVERT
99 STATUS
DIG OUT 2
27
28
108 MODE
109 FULL SCALE VOLTAGE
111 SOURCE
114 GAIN
117 BIAS
126 FORCE FULL
120 STATUS
123 VOLTAGE
ANALOG OUTPUT 1
VOLTAGE OUT 1
29
30
110 FULL SCALE VOLTAGE
112 SOURCE
115 GAIN
118 BIAS
127 FORCE FULL
121 STATUS
124 VOLTAGE
ANALOG OUTPUT 2
VOLTAGE OUT 2
31
32
113 SOURCE
116 GAIN
119 BIAS
128 FORCE FULL
122 STATUS
125 VOLTAGE
ANALOG OUTPUT 3
VOLTAGE OUT 3
33
34
V TO I
CURRENT OUT 1
35
36
V TO I
CURRENT OUT 2
37
38
DRAWN BY: BKP
DATE: 10/23/08
APPROVED BY:
DATE:
TOLERANCES: 1 DEC. PL. = .005" 2 DEC. PL. = .025" 3 DEC. PL. = .005"
CAROTRON
Driven by Excellence
HEATH SPRINGS, SC
TEL 803-286-8614
FAX 803-286-6063
SCALE:
TITLE: MICROMANAGER MM3000-CTCW SOFTWARE BLOCK DIAGRAMS
DRAWING NUMBER: D13539
REV. A
SH. 11 OF 13

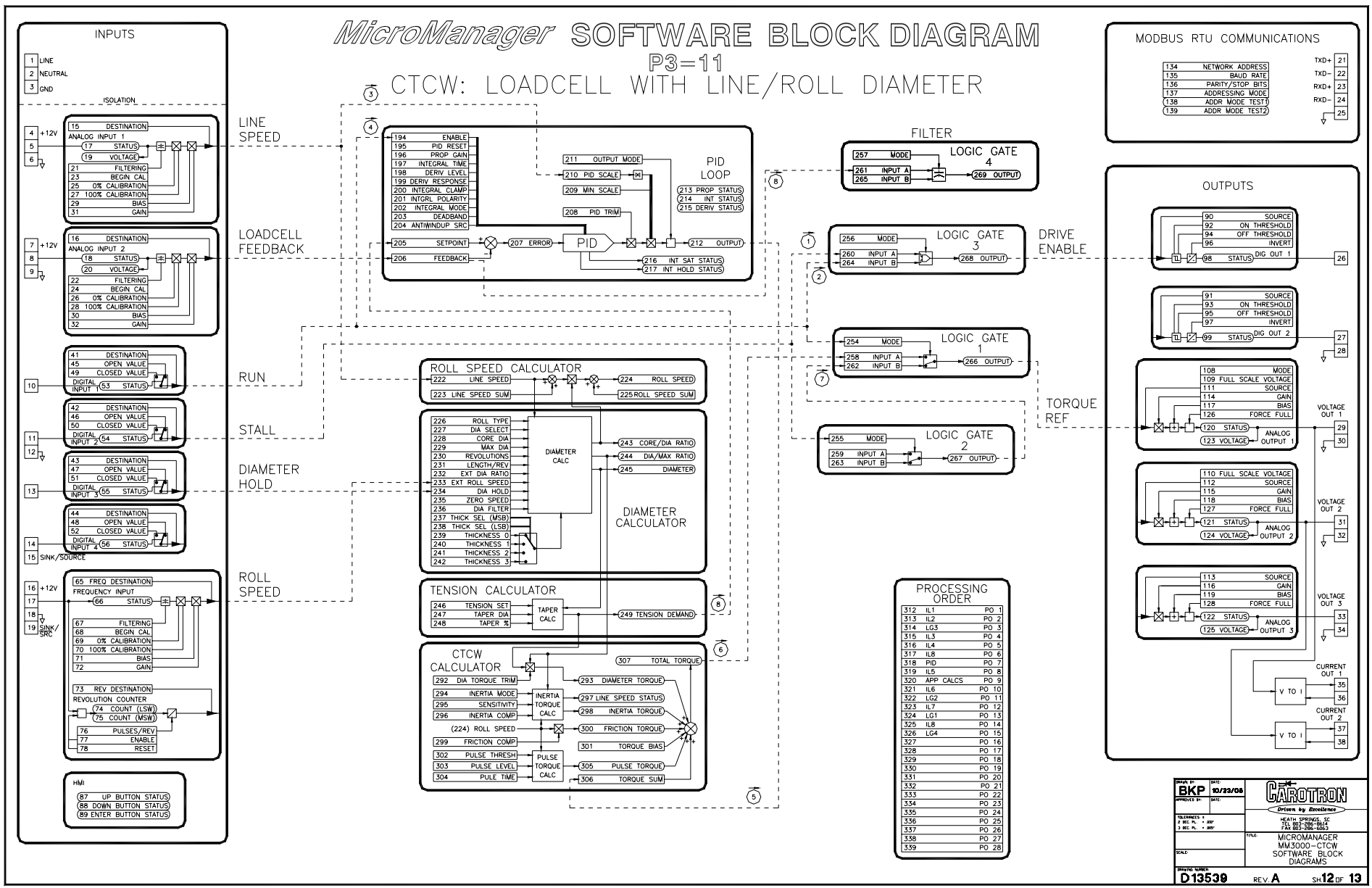
MicroManager SOFTWARE BLOCK DIAGRAM
P3=11
CTCW: LOADCELL WITH LINE/ROLL DIAMETER
INPUTS
1 LINE
2 NEUTRAL
3 GND
ISOLATION
LINE SPEED
LOADCELL FEEDBACK
RUN
STALL
DIAMETER HOLD
ROLL SPEED
ANALOG INPUT 1
ANALOG INPUT 2
DIGITAL INPUT 1
DIGITAL INPUT 2
DIGITAL INPUT 3
DIGITAL INPUT 4
SINK/SOURCE
FREQUENCY INPUT
REVOLUTION COUNTER
HMI
87 UP BUTTON STATUS
88 DOWN BUTTON STATUS
89 ENTER BUTTON STATUS
PID LOOP
194 ENABLE
195 PID RESET
196 PROP GAIN
197 INTEGRAL TIME
198 DERIV LEVEL
199 DERIV RESPONSE
200 INTEGRAL CLAMP
201 INTGRL POLARITY
202 INTEGRAL MODE
203 DEADBAND
204 ANTIWINDUP SRC
205 SETPOINT
206 FEEDBACK
207 ERROR
PID
208 PID TRIM
209 MIN SCALE
210 PID SCALE
211 OUTPUT MODE
212 OUTPUT
213 PROP STATUS
214 INT STATUS
215 DERIV STATUS
216 INT SAT STATUS
217 INT HOLD STATUS
ROLL SPEED CALCULATOR
222 LINE SPEED
223 LINE SPEED SUM
224 ROLL SPEED
225 ROLL SPEED SUM
DIAMETER CALCULATOR
DIAMETER CALC
226 ROLL TYPE
227 DIA SELECT
228 CORE DIA
229 MAX DIA
230 REVOLUTIONS
231 LENGTH/REV
232 EXT DIA RATIO
233 EXT ROLL SPEED
234 DIA HOLD
235 ZERO SPEED
236 DIA FILTER
237 THICK SEL (MSB)
238 THICK SEL (LSB)
239 THICKNESS 0
240 THICKNESS 1
241 THICKNESS 2
242 THICKNESS 3
243 CORE/DIA RATIO
244 DIA/MAX RATIO
245 DIAMETER
TENSION CALCULATOR
TAPER CALC
246 TENSION SET
247 TAPER DIA
248 TAPER %
249 TENSION DEMAND
CTCW CALCULATOR
INERTIA TORQUE CALC
PULSE TORQUE CALC
292 DIA TORQUE TRIM
293 DIAMETER TORQUE
294 INERTIA MODE
295 SENSITIVITY
296 INERTIA COMP
297 LINE SPEED STATUS
298 INERTIA TORQUE
299 FRICTION COMP
300 FRICTION TORQUE
301 TORQUE BIAS
302 PULSE THRESH
303 PULSE LEVEL
304 PULE TIME
305 PULSE TORQUE
306 TORQUE SUM
307 TOTAL TORQUE
FILTER
LOGIC GATE 4
LOGIC GATE 3
LOGIC GATE 1
LOGIC GATE 2
DRIVE ENABLE
TORQUE REF
PROCESSING ORDER
MODBUS RTU COMMUNICATIONS
134 NETWORK ADDRESS
135 BAUD RATE
136 PARITY/STOP BITS
137 ADDRESSING MODE
138 ADDR MODE TEST1
139 ADDR MODE TEST2
TXD+ 21
TXD- 22
RXD+ 23
RXD- 24
OUTPUTS
DIG OUT 1
DIG OUT 2
ANALOG OUTPUT 1
ANALOG OUTPUT 2
ANALOG OUTPUT 3
VOLTAGE OUT 1
VOLTAGE OUT 2
VOLTAGE OUT 3
CURRENT OUT 1
CURRENT OUT 2
V TO I
BKP
10/23/08
CAROTRON
Driven by Excellence
HEATH SPRINGS, SC
TEL 803-286-8647
FAX 803-286-6063
MICROMANAGER
MM3000-CTCW
SOFTWARE BLOCK
DIAGRAMS
D13539
REV. A
SH 12 OF 13

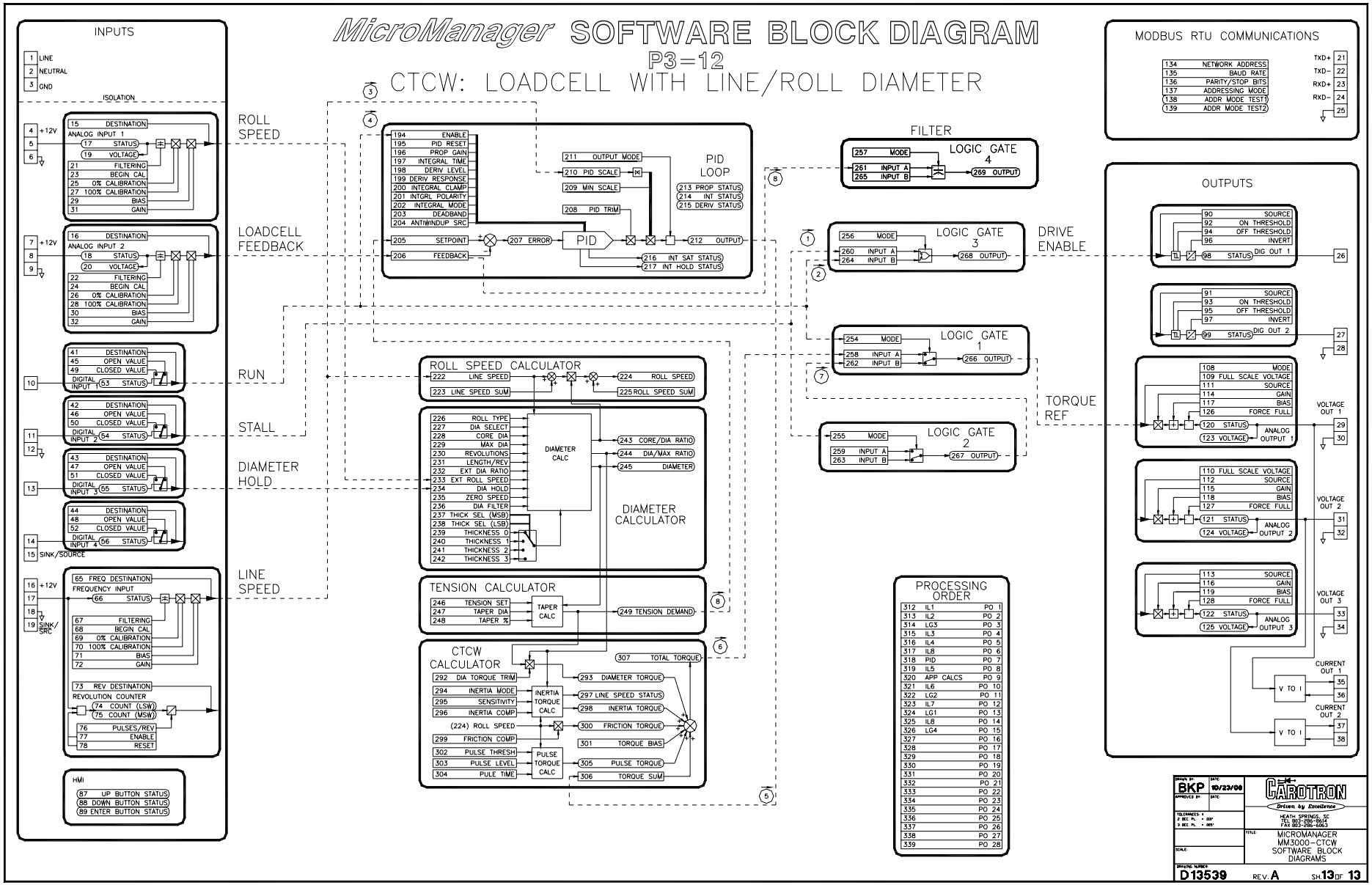
MicroManager SOFTWARE BLOCK DIAGRAM
P3=12
CTCW: LOADCELL WITH LINE/ROLL DIAMETER
INPUTS
1 LINE
2 NEUTRAL
3 GND
ISOLATION
4 +12V
5
6
15 DESTINATION
ANALOG INPUT 1
17 STATUS
19 VOLTAGE
21 FILTERING
23 BEGIN CAL
25 0% CALIBRATION
27 100% CALIBRATION
29 BIAS
31 GAIN
ROLL SPEED
7 +12V
8
9
16 DESTINATION
ANALOG INPUT 2
18 STATUS
20 VOLTAGE
22 FILTERING
24 BEGIN CAL
26 0% CALIBRATION
28 100% CALIBRATION
30 BIAS
32 GAIN
LOADCELL FEEDBACK
10
41 DESTINATION
45 OPEN VALUE
49 CLOSED VALUE
DIGITAL INPUT 1
53 STATUS
RUN
11
12
42 DESTINATION
46 OPEN VALUE
50 CLOSED VALUE
DIGITAL INPUT 2
54 STATUS
STALL
13
43 DESTINATION
47 OPEN VALUE
51 CLOSED VALUE
DIGITAL INPUT 3
55 STATUS
DIAMETER HOLD
14
44 DESTINATION
48 OPEN VALUE
52 CLOSED VALUE
DIGITAL INPUT 4
56 STATUS
15 SINK/SOURCE
16 +12V
17
18
19 SINK/SRC
65 FREQ DESTINATION
FREQUENCY INPUT
66 STATUS
67 FILTERING
68 BEGIN CAL
69 0% CALIBRATION
70 100% CALIBRATION
71 BIAS
72 GAIN
LINE SPEED
73 REV DESTINATION
REVOLUTION COUNTER
74 COUNT (LSW)
75 COUNT (MSW)
76 PULSES/REV
77 ENABLE
78 RESET
HMI
87 UP BUTTON STATUS
88 DOWN BUTTON STATUS
89 ENTER BUTTON STATUS
194 ENABLE
195 PID RESET
196 PROP GAIN
197 INTEGRAL TIME
198 DERIV LEVEL
199 DERIV RESPONSE
200 INTEGRAL CLAMP
201 INTGRL POLARITY
202 INTEGRAL MODE
203 DEADBAND
204 ANTIWINDUP SRC
205 SETPOINT
206 FEEDBACK
207 ERROR
PID
211 OUTPUT MODE
210 PID SCALE
209 MIN SCALE
208 PID TRIM
212 OUTPUT
216 INT SAT STATUS
217 INT HOLD STATUS
PID LOOP
213 PROP STATUS
214 INT STATUS
215 DERIV STATUS
ROLL SPEED CALCULATOR
222 LINE SPEED
223 LINE SPEED SUM
224 ROLL SPEED
225 ROLL SPEED SUM
226 ROLL TYPE
227 DIA SELECT
228 CORE DIA
229 MAX DIA
230 REVOLUTIONS
231 LENGTH/REV
232 EXT DIA RATIO
233 EXT ROLL SPEED
234 DIA HOLD
235 ZERO SPEED
236 DIA FILTER
237 THICK SEL (MSB)
238 THICK SEL (LSB)
239 THICKNESS 0
240 THICKNESS 1
241 THICKNESS 2
242 THICKNESS 3
DIAMETER CALC
243 CORE/DIA RATIO
244 DIA/MAX RATIO
245 DIAMETER
DIAMETER CALCULATOR
TENSION CALCULATOR
246 TENSION SET
247 TAPER DIA
248 TAPER %
TAPER CALC
249 TENSION DEMAND
CTCW CALCULATOR
292 DIA TORQUE TRIM
294 INERTIA MODE
295 SENSITIVITY
296 INERTIA COMP
(224) ROLL SPEED
299 FRICTION COMP
302 PULSE THRESH
303 PULSE LEVEL
304 PULE TIME
INERTIA TORQUE CALC
PULSE TORQUE CALC
307 TOTAL TORQUE
293 DIAMETER TORQUE
297 LINE SPEED STATUS
298 INERTIA TORQUE
300 FRICTION TORQUE
301 TORQUE BIAS
305 PULSE TORQUE
306 TORQUE SUM
FILTER
257 MODE
261 INPUT A
265 INPUT B
LOGIC GATE 4
269 OUTPUT
256 MODE
260 INPUT A
264 INPUT B
LOGIC GATE 3
268 OUTPUT
DRIVE ENABLE
254 MODE
258 INPUT A
262 INPUT B
LOGIC GATE 1
266 OUTPUT
255 MODE
259 INPUT A
263 INPUT B
LOGIC GATE 2
267 OUTPUT
TORQUE REF
PROCESSING ORDER
312 IL1 PO 1
313 IL2 PO 2
314 LG3 PO 3
315 IL3 PO 4
316 IL4 PO 5
317 IL8 PO 6
318 PID PO 7
319 IL5 PO 8
320 APP CALCS PO 9
321 IL6 PO 10
322 LG2 PO 11
323 IL7 PO 12
324 LG1 PO 13
325 IL8 PO 14
326 LG4 PO 15
327 PO 16
328 PO 17
329 PO 18
330 PO 19
331 PO 20
332 PO 21
333 PO 22
334 PO 23
335 PO 24
336 PO 25
337 PO 26
338 PO 27
339 PO 28
MODBUS RTU COMMUNICATIONS
134 NETWORK ADDRESS
135 BAUD RATE
136 PARITY/STOP BITS
137 ADDRESSING MODE
138 ADDR MODE TEST1
139 ADDR MODE TEST2
TXD+ 21
TXD- 22
RXD+ 23
RXD- 24
25
OUTPUTS
90 SOURCE
92 ON THRESHOLD
94 OFF THRESHOLD
96 INVERT
98 STATUS
DIG OUT 1
26
91 SOURCE
93 ON THRESHOLD
95 OFF THRESHOLD
97 INVERT
99 STATUS
DIG OUT 2
27
28
108 MODE
109 FULL SCALE VOLTAGE
111 SOURCE
114 GAIN
117 BIAS
126 FORCE FULL
120 STATUS
123 VOLTAGE
ANALOG OUTPUT 1
VOLTAGE OUT 1
29
30
110 FULL SCALE VOLTAGE
112 SOURCE
115 GAIN
118 BIAS
127 FORCE FULL
121 STATUS
124 VOLTAGE
ANALOG OUTPUT 2
VOLTAGE OUT 2
31
32
113 SOURCE
116 GAIN
119 BIAS
128 FORCE FULL
122 STATUS
125 VOLTAGE
ANALOG OUTPUT 3
VOLTAGE OUT 3
33
34
CURRENT OUT 1
V TO I
35
36
CURRENT OUT 2
V TO I
37
38
DRAWN BY: BKP
DATE: 10/23/00
APPROVED BY:
DATE:
TOLERANCES: 1 PL. ± .005" 2 DEC PL. ± .010" 3 DEC PL. ± .005"
SCALE:
CAROTRON
Driven by Excellence
HICKORY, NC
MICROMANAGER MM3000-CTCW SOFTWARE BLOCK DIAGRAMS
DRAWING NUMBER D13539
REV. A
SH. 13 OF 13

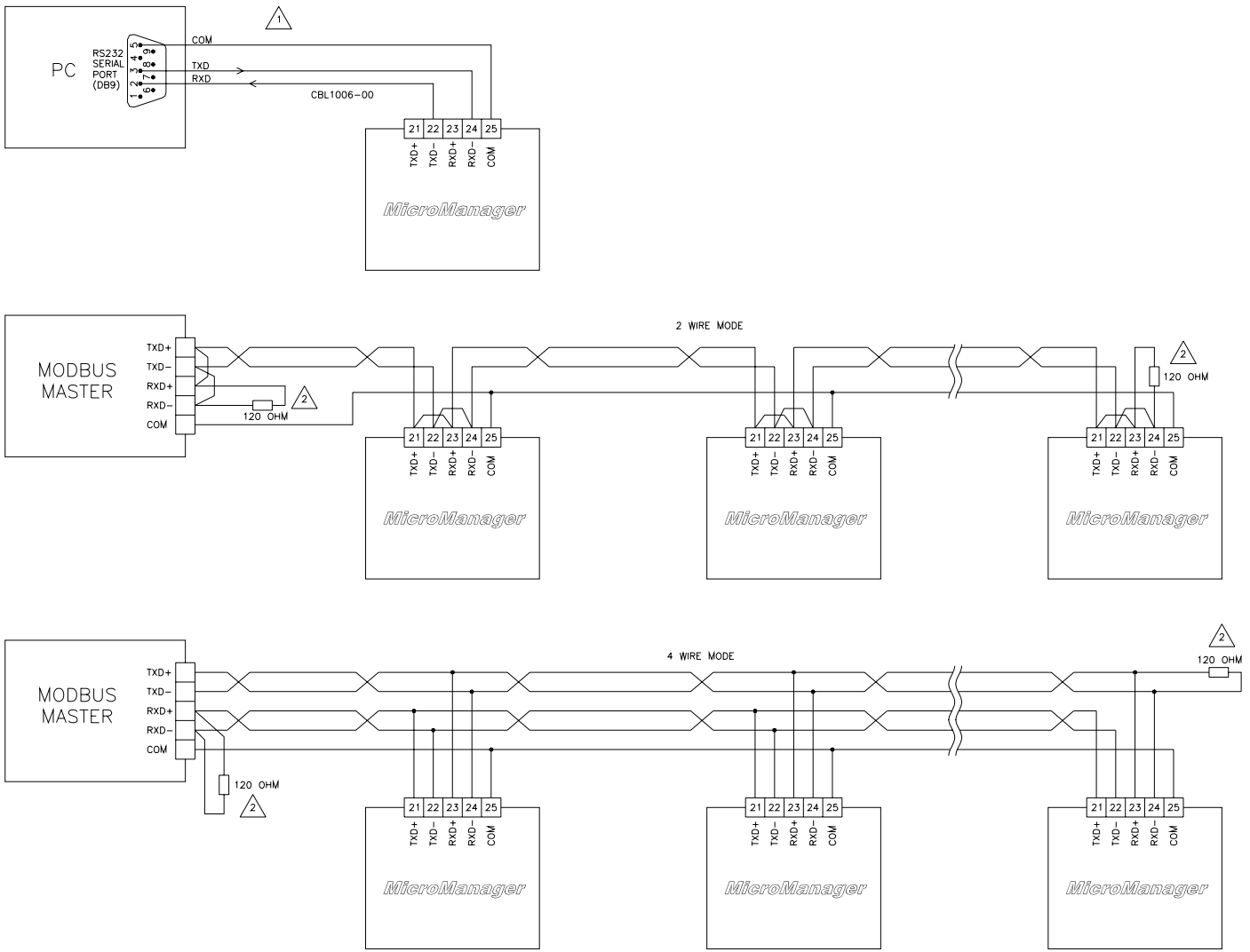

NOTES:

1. THE PC CONNECTION SHOWN IS FOR TEMPORARY SETUP ONLY. PERMANENT INSTALLATIONS REQUIRE AN RS232 TO RS485 CONVERTER.
2. IT IS RECOMMENDED THAT A TERMINATING RESISTOR BE INSTALLED AT EACH END OF THE NETWORK AS SHOWN.
3. MAXIMUM TOTAL NETWORK LENGTH IS 4000 FEET.
4. THE COMMUNICATION WIRING SHOULD BE ROUTED SEPARATELY FROM HIGH LEVEL WIRING SUCH AS ARMATURE, FIELD, OPERATOR AND RELAY CONTROL WIRING. WHEN THESE TWO TYPES OF WIRING MUST CROSS, THEY SHOULD DO SO AT RIGHT ANGLES.

REV. B, 7/27/09, CORRECT PC CONNECTIONS

DRAWN BY: BKP	DATE: 10/16/06	CAROTRON Driven by Excellence
APPROVED BY:	DATE:	HEATH SPRINGS, SC TEL 803-286-8614 FAX 803-286-6063
TOLERANCES: 0 DEC PL. = .010" 3 DEC PL. = .005"		TITLE: MICROMANAGER MODBUS NETWORK CONNECTIONS
SCALE:		
DRAWING NUMBER: D13307	REV. B	SH. 1 OF 1

10 Standard Terms & Conditions of Sale

1. General
The Standard Terms and Conditions of Sale of Carotron, Inc. (hereinafter called "Company") are set forth as follows in order to give the Company and the Purchaser a clear understanding thereof. No additional or different terms and conditions of sale by the Company shall be binding upon the Company unless they are expressly consented to by the Company in writing. The acceptance by the Company of any order of the Purchaser is expressly conditioned upon the Purchaser's agreement to said Standard Terms and Conditions. The acceptance or acknowledgement, written, oral, by conduct or otherwise, by the Company of the Purchaser's order shall not constitute written consent by the Company to addition to or change in said Standard Terms and Conditions.

2. Prices
Prices, discounts, allowances, services and commissions are subject to change without notice. Prices shown on any Company published price list and other published literature issued by the Company are not offers to sell and are subject to express confirmation by written quotation and acknowledgement. All orders of the Purchaser are subject to acceptance, which shall not be effective unless made in writing by an authorized Company representative at its office in Heath Springs, S.C. The Company may refuse to accept any order for any reason whatsoever without incurring any liability to the Purchaser. The Company reserves the right to correct clerical and stenographic errors at any time.

3. Shipping dates
Quotation of a shipping date by the Company is based on conditions at the date upon which the quotation is made. Any such shipping date is subject to change occasioned by agreements entered into previous to the Company's acceptance of the Purchaser's order, governmental priorities, strikes, riots, fires, the elements, explosion, war, embargoes, epidemics, quarantines, acts of God, labor troubles, delays of vendors or of transportation, inability to obtain raw materials, containers or transportation or manufacturing facilities or any other cause beyond the reasonable control of the Company. In no event shall the Company be liable for consequential damages for failure to meet any shipping date resulting from any of the above causes or any other cause.

In the event of any delay in the Purchaser's accepting shipment of products or parts in accordance with scheduled shipping dates, which delay has been requested by the Purchaser, or any such delay which has been caused by lack of shipping instructions, the Company shall store all products and parts involved at the Purchaser's risk and expense and shall invoice the Purchaser for the full contract price of such products and parts on the date scheduled for shipment or on the date on which the same is ready for delivery, whichever occurs later.

4. Warranty
The Company warrants to the Purchaser that products manufactured or parts repaired by the Company, will be free, under normal use and maintenance, from defects in material and workmanship for a period of one (1) year after the shipment date from the Company's factory to the Purchaser. The Company makes no warranty concerning products manufactured by other parties.

As the Purchaser's sole and exclusive remedy under said warranty in regard to such products and parts, including but not limited to remedy for consequential damages, the Company will at its option, repair or replace without charge any product manufactured or part repaired by it, which is found to the Company's satisfaction to be so defective; provided, however, that (a) the product or part involved is returned to the Company at the location designated by the Company, transportation charges prepaid by the Purchaser; or (b) at the Company's option the product or part will be repaired or replaced in the Purchaser's plant; and also provided that Cc) the Company is notified of the defect within one (1) year after the shipment date from the Company's factory of the product or part so involved.

The Company warrants to the Purchaser that any system engineered by it and started up under the supervision of an authorized Company representative will, if properly installed, operated and maintained, perform in compliance with such system's written specifications for a period of one (1) year from the date of shipment of such system.

As the Purchaser's sole and exclusive remedy under said warrant in regard to such systems, including but not limited to remedy for consequential damages, the Company will, at its option, cause, without charges any such system to so perform, which system is found to the Company's satisfaction to have failed to so perform, or refund to the Purchaser the purchase price paid by the Purchaser to the Company in regard thereto; provided, however, that (a) Company and its representatives are permitted to inspect and work upon the system involved during reasonable hours, and (b) the Company is notified of the failure within one (1) year after date of shipment of the system so involved.

The warranties hereunder of the Company specifically exclude and do not apply to the following:

a. Products and parts damaged or abused in shipment without fault of the Company.

b. Defects and failures due to operation, either intentional or otherwise, (l) above or beyond rated capacities, (2) in connection with equipment not recommended by the Company, or (3) in an otherwise improper manner.

c. Defects and failures due to misapplication, abuse, improper installation or abnormal conditions of temperature, humidity, abrasives, dirt or corrosive matter.

d. Products, parts and systems which have been in any way tampered with or altered by any party other than an authorized Company representative.

e. Products, parts and systems designed by the Purchaser.

f. Any party other than the Purchaser.

The Company makes no other warranties or representation, expressed or implied, of merchantability and of fitness for a particular purpose, in regard to products manufactured, parts repaired and systems engineered by it.

5. Terms of payment
Standard terms of payment are net thirty (30) days from date of the Company invoice. For invoice purposed, delivery shall be deemed to be complete at the time the products, parts and systems are shipped from the Company and shall not be conditioned upon the start up thereof. Amounts past due are subject to a service charge of 1.5% per month or fraction thereof.

6. Order cancellation
Any cancellation by the Purchaser of any order or contract between the Company and the Purchaser must be made in writing and receive written approval of an authorized Company representative at its office in Heath Springs, S.C. In the event of any cancellation of an order by either party, the Purchaser shall pay to the Company the reasonable costs, expenses, damages and loss of profit of the Company incurred there by, including but not limited to engineering expenses and expenses caused by commitments to the suppliers of the Company's subcontractors, as determined by the Company.

7. Changes
The Purchaser may, from time to time, but only with the written consent of an authorized Company representative, make a change in specifications to products, parts or systems covered by a purchase order accepted by the company. In the event of any such changes, the Company shall be entitled to revise its price and delivery schedule under such order.

8. Returned material
If the Purchaser desires to return any product or part, written authorization thereof must first be obtained from the Company which will advise the Purchaser of the credit to be allowed and restocking charges to be paid in regard to such return. No product or part shall be returned to the Company without a "RETURNTAG" attached thereon which has been issued by the Company.

9. Packing
Published prices and quotations include the Company's standard packing for domestic shipment. Additional expenses for special packing or overseas shipments shall be paid by the Purchaser. If the Purchaser does not specify packing or accepts parts unpacked, no allowance will be made to the Purchaser in lieu of packing.

10. Standard transportation policy
Unless expressly provided in writing to the contrary, products, parts and systems are sold f.o.b. first point of shipment. Partial shipments shall be permitted, and the Company may invoice each shipment separately. Claims for non-delivery of products, parts and systems, and for damages thereto must be filed with the carrier by the Purchaser. The Company's responsibility therefor shall cease when the carrier signs for and accepts the shipment.

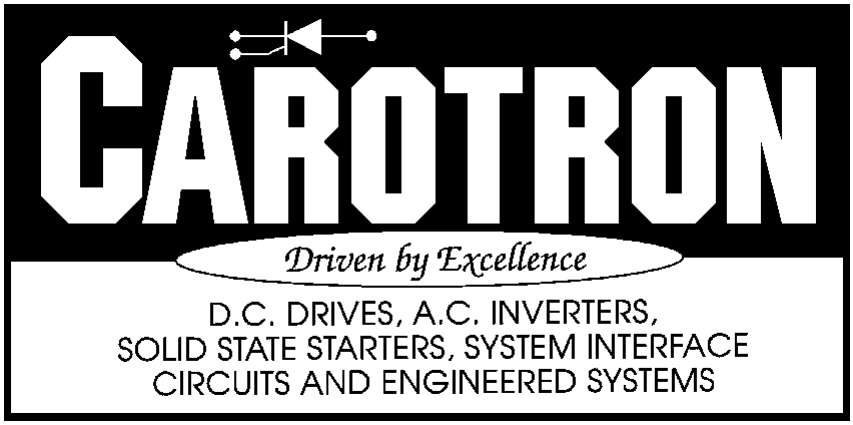

3204 Rocky River Road
Heath Springs, SC 29058
Phone: 803.286.8614
Fax: 803.286.6063
Email: saleserv@carotron.com
Web: www.carotron.com
MAN1048-2B
Issued 08-11-2009